MOORE COUNTY BOARD OF COMMISSIONERS

MONDAY, DECEMBER 3, 2018, 5:30 P.M.

ORGANIZATIONAL AND REGULAR MEETING

The Moore County Board of Commissioners convened for an Organizational and Regular Meeting at 5:30 p.m., Monday, December 3, 2018, in the Commissioners' Meeting Room on the second floor of the Historic Courthouse in Carthage, North Carolina.

Commissioners Present:
Frank Quis, Catherine Graham, Jerry Daeke, Louis Gregory, Otis Ritter

****

Clerk to the Board Laura Williams the meeting to order at 5:30 p.m. Reverend Adam Beddingfield of the 705 Church of God of Prophecy offered the invocation and Register of Deeds Judy Martin led the Pledge of Allegiance. On behalf of the Board, Ms. Williams welcomed everyone present.

The oaths of office were administered by Ms. Williams to Catherine Graham, Jerry Daeke, and Otis Ritter.

ſs. Williams presided over the selection of a Chairman. Upon motion made by Commissioner Graham, seconded by Commissioner Ritter, the Board voted 5-0 to select Commissioner Quis as the Chairman for the ensuing year. Chairman Quis said it was an honor and he looked forward to serving for the next year.

Chairman Quis presided over the selection of a Vice Chairman. Upon motion made by Commissioner Daeke, seconded by Commissioner Gregory, the Board voted 5-0 to select Commissioner Graham as Vice Chairman for the ensuing year.

Commissioner Gregory and Chairman Quis offered complimentary remarks regarding Commissioner Graham's leadership as Chair of the Board the previous two years.

Chairman Quis recessed the meeting for a reception held in the rotunda on the first floor.

The Board reconvened at 6:18 p.m. Chairman Quis noted that this was a little earlier than anticipated but everyone downstairs had been notified. Chairman Quis acknowledged dignitaries who were present earlier and those who were still in attendance.

PUBLIC COMMENT PERIOD

There were no speakers.

ADDITIONAL AGENDA

Upon motion made by Commissioner Ritter, seconded by Commissioner Daeke, the Board voted 5-0 to add an agenda item request from the Schools as the last item under New Business.

CONSENT AGENDA

Upon motion made by Commissioner Daeke, seconded by Commissioner Ritter, the Board voted 5-0 to approve the following consent agenda items:

Public Official Bonds
Minutes: November 20, 2018 Regular Meeting
Budget Amendments
Digital Learning Invoices for Moore County Schools
FY19 Juvenile Crime Prevention Council Funding Plan Revision
Resolution Authorizing Upset Bid Process for LRK # 00026840
Deed of Dedication for Winston Pines
Sheriff Fee for Off Duty Assignment Pay
Amendment of FY19 Budget Ordinance, Section 10 for Sheriff's Office

The public officials bonds resolution, budget amendments, resolution authorizing the upset bid process, Sheriff fee information, and resolution amending the budget ordinance are hereby incorporated as a part of these minutes by attachment as Appendices A, B, C, D, and E, respectively.

PUBLIC HEARINGS

Public Hearing/Planning – Text Amendments to the Unified Development Ordinance

Planning and Transportation Director Debra Ensminger reviewed recommended text amendments to the Unified Development Ordinance. Chairman Quis opened the duly advertised public hearing regarding this matter. Commissioner Gregory inquired with Sheriff Ronnie Fields regarding any comments he may have on gaming included in the amendments and Sheriff Fields said he did not have any comments at this time. There being no speakers, Chairman Quis closed the public hearing. Upon motion made by Commissioner Gregory, seconded by Commissioner Graham, the Board voted 5-0 to adopt the Land Use Plan Consistency Statement approval and authorize the Chairman to execute the document as required by North Carolina General Statute 153A-341. Upon motion made by Commissioner Graham, seconded by Commissioner Ritter, the Board voted 5-0 to approve the proposed text amendments to the Moore County Unified Development Ordinance. The consistency statement and Ms. Ensminger's staff report are hereby incorporated as a part of these minutes by attachment as Appendix F.

Public Hearing/GIS – Amendments to the Road Name and Addressing Ordinance

Chairman Quis opened the duly advertised public hearing regarding this matter. There were no speakers. Chairman Quis closed the public hearing. GIS Manager Rachel Patterson reviewed proposed amendments to the Moore County Road Name and Addressing Ordinance. Upon motion made by Commissioner Ritter, seconded by Commissioner Daeke, the Board voted 5-0 to add thirteen roads to the Moore County Road Naming and Addressing Ordinance as proposed. The amendment is hereby incorporated as a part of these minutes by attachment as Appendix G.

NEW BUSINESS

Public Works – Request for Approval of Fee Schedule Amendment for Moore County Landfill Transfer Station

Public Works Solid Waste Division Manager Chad Beane reviewed a request for a revised fee schedule for Moore County Solid Waste and provided background information, including that he had met with municipalities regarding increased costs. Chairman Quis said he was pleased Mr. Beane had met with the

municipalities. Upon motion made by Commissioner Graham, seconded by Commissioner Ritter, the Board voted 5-0 to approve the revised fee schedule for the Solid Waste Division. The revised fee schedule as well as Mr. Beane's staff report are hereby incorporated as a part of these minutes by attachment as Appendix H.

ublic Works – Request for Approval of Contract for Removal and Hauling of Mulch from Landfill

Public Works Solid Waste Division Manager Chad Beane requested the Board's approval of a contract for the removal and hauling of mulch from the Moore County Landfill. Commissioner Ritter asked whether the mulch was available to the public and Mr. Beane confirmed that it was available to the public at no charge, but cautioned that it was not pristine. Upon motion made by Commissioner Daeke, seconded by Commissioner Ritter, the Board voted 5-0 to approve the contract with Judy D. Brooks Contractor, Inc. for the purpose of removal and hauling of mulch material from the Moore County Landfill to a permitted facility and authorize the Chairman to sign the same upon approval by the County Attorney and Finance.

Cooperative Extension – Request for NCSU Fork to Farmer Authorization for Application

Cooperative Extension Director Deborah McGiffin reviewed a request for authorization to apply for a Fork to Farmer partnership which would promote local farms through the statewide distribution of a video produced to highlight the relationship between local farmers who supply local restaurants, and by providing individual technical assistance to local farms that wish to supplement farm income through agritourism. Upon motion made by Commissioner Graham, seconded by Commissioner Ritter, the Board voted 5-0 to authorize the Moore County Cooperative Extension Service to apply and submit the Fork to Farm partnership application to the NCSU Department of Extension Community and Rural Development and authorize Moore County Extension to proceed with the production of the Moore County Fork to Farmer video utilizing funds available in the FY19 Extension budget.

ocial Services – Request for Approval of Modification Agreement to Memorandum of Understanding between Moore County and NCDHHS

Social Services Director Laura Cockman requested the Board approve a modification agreement to the memorandum of understanding for fiscal year 2018-2019 between Moore County and the North Carolina Department of Health and Human Services. Commissioner Graham commented that what looked good on paper could not always be accomplished and she was glad to see the State making these changes. Commissioner Ritter asked if the goals could now be achieved (with the modifications) and Ms. Cockman explained that it was difficult to tell. Upon motion made by Commissioner Graham, seconded by Commissioner Gregory, the Board voted 5-0 to approve the modification agreement to the MOU with DHHS as required by the State and authorize the Chairman to sign the same on behalf of the Moore County Board of Commissioners.

Sheriff's Office – Request for Inmate Services Award Standard Waiver

Captain Bill Flint presented a request for waiver of the RFP bid award standard in the County procurement policy for service contract so that a contract could be awarded based on evaluation criteria including experience, support, references, features, and overall package. The Detention Center's contracts with Legacy, Oasis, and Renovo would expire at the end of the fiscal year and staff was currently in the process of receiving requests for proposals for an all-inclusive contract. Commissioner Graham confirmed that this was recommended by the Sheriff and Sheriff Ronnie Fields, present at the meeting, said yes. Chairman Quis inquired about this being a venue item and Captain Flint explained how inmates were charged. Upon motion made by Commissioner Ritter, seconded by Commissioner Gregory, the Board voted 5-0 to approve the amendment.

Public Safety – Request for Adoption of 2018 Fire Code

Public Safety Director Bryan Phillips asked the Board to adopt the 2015 International Fire Code with 2018 North Carolina Amendments and he reviewed the information. Upon motion made by Chairman Quis, seconded by Commissioner Graham, the Board voted 5-0 to adopt the Resolutions for the 2015 International Fire Code, with 2018 North Carolina amendments and the following Appendices: Appendix b – Fire-Flow Requirements for Buildings, Appendix C – Fire Hydrant Location and Distribution, Appendix D – Fire Apparatus Access Roads, Appendix E – Hazard Categories, Appendix F – Hazard Ranking, Appendix G – Cryogenic Fluids – Weight and Volume Equivalents, Appendix H – Hazardous Materials Management Plan (HMMP) and Hazardous Materials Inventory Statement (HMIS) Instruction, and Appendix J – Building Information Sign Appendix. The resolution and appendices are hereby incorporated as a part of these minutes by attachment as Appendix I.

Public Safety – Request for Renewal of Lease on Carthage VIPER Tower

Public Safety Director Bryan Phillips requested approval of a letter for renewal of the lease for the communication antenna space on the telecommunications facility located at Glendon-Carthage Road. Upon motion made by Commissioner Ritter, seconded by Commissioner Daeke, the Board voted 5-0 to approved the letter to the NC State Highway Patrol – VIPER Project to request the renewal of the lease for the communication antenna space on the telecommunications facility located at Glendon-Carthage Road in Carthage, NC for an additional five-year term, beginning on October 1, 2018 and ending on September 30, 2023 and authorize the Chairman to sign the letter. The letter is hereby incorporated as a part of these minutes by attachment as Appendix J.

Public Safety – Request for Approval of Purchase and Contract for Service for EMS Stretchers

Public Safety Director Bryan Phillips requested the Board's approval of contracts for EMS stretchers and reviewed the information. Commissioner Graham requested confirmation that the total amount would not change and Mr. Phillips said it would not. Commissioner Graham asked what would happen to the used stretchers and Mr. Phillips explained that there was trade-in value for those. Upon motion made by Commissioner Ritter, seconded by Commissioner Graham, the Board voted 5-0 to award the bid (RFP# 2019-03) to U.S. Bancorp Government Leasing and Finance, Inc., and authorize Moore County to enter into a purchase contract and contract for services not to exceed $223,200 for Stryker Power-Pro XT stretchers, and a seven year service agreement, and allow the Chairman to sign all associated documents pending the Moore County Attorney and Finance Officer approval. Commissioner Ritter asked if there would be any upgrades to the stretchers and Mr. Phillips said there would and shared some of that information.

Administration – Request for Approval of Contract with Riley Paving, Inc.

Capital Projects Manager Rich Smith requested the Board's approval of a contract for paving at the Carriage Oaks center in Carthage. Commissioner Graham asked if it would include the whole parking area and Mr. Smith explained that it would include the three entrances. Commissioner Graham inquired as to why there was only one bid and Mr. Smith shared potential factors. Commissioner Gregory asked when it was last paved and Mr. Smith said he did not know and this could even be the original paving. Commissioner Gregory asked if this was the right time of year for paving and Mr. Smith said no and the contractor would probably wait until mid-February or later. Upon motion made by Commissioner Graham, seconded by Commissioner Ritter, the Board voted 5-0 to approve the contract with Riley Paving, Inc. and authorize the Chairman to sign the same.

Administration – Request for Approval of Resolution Levying an Additional One-Quarter Cent County Sales and Use Tax

County Manager Wayne Vest requested the Board's adoption of a resolution levying an additional one-quarter cent county sales and use tax and reviewed steps that led to the presentation of this resolution. Upon motion made by Commissioner Graham, seconded by Commissioner Ritter, the Board voted 5-0 to adopt a resolution levying an additional one-quarter cent county sales and use tax. The resolution is hereby incorporated as a part of these minutes by attachment as Appendix K.

Moore County Schools – Request for Funding for Early Site Grading for Southern Pines School

Moore County Schools Executive Officer for Operations John Birath asked the Board to approve funding for early site grading for the new Southern Pines elementary school. Expediting this phase of the project would provide opportunity to save on construction cost escalation. Mr. Birath had previously discussed this request with the commissioners during an October 31, 2018 work session, and the funds would come from the Capital Reserve and be reimbursed through the General Obligation Bond financing process. Upon motion made by Commissioner Graham, seconded by Commissioner Ritter, the Board voted 5-0 to approve the Board of Education request to provide the requested funding of $1,131,360.75 for early site grading for the replacement Southern Pines Elementary.

APPOINTMENTS

Courthouse Facilities Advisory Committee

Upon motion made by Commissioner Graham, seconded by Commissioner Gregory, the Board voted 5-0 to appoint Sheriff Ronnie Fields to the Courthouse Facilities Advisory Committee.

Fire Commission

Upon motion made by Commissioner Ritter, seconded by Commissioner Daeke, the Board voted 5-0 to waive the term lengths prescribed by the Fire Commission bylaws for the appointments made during the December 3, 2018 meeting only. Upon motion made by Commissioner Daeke, seconded by Commissioner Graham, the Board voted 5-0 to appoint Barbara Allred, James Dunlap, and Larry Caddell as citizen representatives to the Fire Commission for terms commencing December 1, 2018 and expiring May 31, 2021. Upon motion made by Commissioner Ritter, seconded by Commissioner Graham, the Board voted 5-0 to appoint Jon McIver and Erik Stromberg as chief representatives for their respective regions for terms commencing December 1, 2018 and expiring May 31, 2020. Upon motion made by Commissioner Ritter, seconded by Commissioner Daeke, the Board voted 5-0 to extend the term expiration of all remaining members by six months so the term will be completed May 31 instead of November 30.

Juvenile Crime Prevention Council

Upon motion made by Commissioner Graham, seconded by Commissioner Ritter, the Board voted 5-0 to change JCPC member Laura May's designation to the Schools representative.

Local Emergency Planning Committee

Upon motion made by Commissioner Graham, seconded by Commissioner Daeke, the Board voted 5-0 to appoint Shannon Stroud to the Local Emergency Planning Committee as the hospital representative for a three-year term commencing January 1, 2019 and expiring December 31, 2021.

Nursing and Adult Care Home Community Advisory Committee

Upon motion made by Commissioner Gregory, seconded by Commissioner Ritter, the Board voted 5-0 to appoint Sandi King and Robbie Salisbury to the Nursing and Adult Care Home Community Advisory Committee for initial one-year terms expiring December 31, 2019. Upon motion made by Commissioner Gregory, seconded by Commissioner Graham, the Board voted 5-0 to reappoint Helen Schillaci to the Nursing and Adult Care Home Community Advisory Committee for a three-year term expiring December 31, 2021.

Transportation Advisory Board

Upon motion made by Commissioner Graham, seconded by Commissioner Gregory, the Board voted 5-0 to appoint Kevin Griffin to the Moore County Schools representative position on the Transportation Advisory Board for a three-year term expiring December 31, 2021, and to change TAB member Gracie Dowdy's position designation to citizen/transit representative.

MANAGER'S REPORT

County Manager Wayne Vest thanked Commissioner Graham for serving the last two years as Chair of the Board, and he offered his congratulations on her selection as Vice Chair. Mr. Vest congratulated Chairman Quis as well. He said he looked forward to continuing work with the Board on many projects coming up. Mr. Vest wished a merry Christmas and happy New Year to everyone.

COMMISSIONERS' COMMENTS

Commissioner Daeke discussed that the past four years had been exciting and that the Board had some good things started that he was anxious to see completed.

Commissioner Gregory discussed that there was much to be proud of from the past couple of weeks. He discussed Pinecrest football coach Chris Metzger's national most valuable coach award and the team being in the running for the State championship. He said the Board had intended to recognize him during this meeting but would plan to recognize him instead at the first meeting in January (due to a scheduling conflict).

Commissioner Graham said she appreciated the votes of the people and confidence in re-electing her, and that she looked forward to seeing projects come to completion. She said it had been a pleasure and an honor to serve as Chair and she complimented staff and her fellow commissioners.

Commissioner Ritter commented that as Vice Chairman it had been his pleasure to serve with Commissioner Graham as Chair and that it had been an exciting year.

Chairman Quis thanked County Manager Wayne Vest and staff for the work done each day. He discussed that the Board could not rest on its laurels and would need to continue looking ahead.

ADJOURNMENT

There being no further business, Chairman Quis adjourned the meeting at 7:26 p.m.

Francis R. Quis, Jr., Chairman

COUNTY OF MOORE CORPORATE SEAL NORTH CAROLINA

Laura M. Williams, Clerk to the Board

Appendix A
12/3/2018

RESOLUTION REGARDING THE EXAMINATION OF OFFICIAL BOND FOR PUBLIC OFFICIALS OF MOORE COUNTY, NORTH CAROLINA

WHEREAS, N.C.G.S. 58-72-20 requires careful examination of the bonds of the officers named in N.C.G.S. 58-72-10, and herein, at their first meeting in December of every year, to insure sufficient surety for the term of the office to which such officer is chosen:

1. **Chief Finance Officer**: Pursuant to N.C.G.S. 159-29(a) the finance officer shall give a true accounting and faithful performance bond with sufficient sureties in an amount to be fixed by the governing board, not less than fifty thousand dollars ($50,000). The premium on the bond shall be paid by the local government. *(Insurance recommendation: two hundred fifty thousand dollars ($250,000))*
2. **Register of Deeds**: N.C.G.S. 161-4(a) requires bond of not less than ten thousand dollars ($10,000) nor more than fifty thousand dollars ($50,000) to be approved by the Board of Commissioners, payable to the State and conditioned for the safekeeping of the books and records, and for the faithful discharge of the duties of the office. *(Insurance recommendation fifty thousand dollars ($50,000))*
3. **Sheriff** – N.C.G.S. 162-8 states the amount of the bond shall be determined by the Board of Commissioners, but shall not exceed twenty-five thousand dollars ($25,000). *(Insurance recommendation twenty-five thousand dollars ($25,000))*
4. **Tax Administrator and Deputy Tax Administrator**: Pursuant to N.C.G.S. 105-349(c) no tax collector shall be allowed to begin duties until he/she shall have furnished bond conditioned upon the collector's honesty and faithful performance in such an amount as the governing body may prescribe. A tax collector shall not be permitted to collect any taxes not covered by his/her bond. *(Insurance recommendation two hundred fifty thousand dollars ($250,000) for each officer)*

WHEREAS, the Moore County Finance Office has secured from The Ohio Casualty Insurance Company and Western Surety Company, the attached official bonds for the above referenced public officials in the amounts recommended for the Moore County Board of Commissioners' consideration and approval.

NOW THEREFORE BE IT RESOLVED by the Moore County Board of Commissioners that Official Bonds for the public officials referenced above in the recommended amounts from The Ohio Casualty Insurance Company and Western Surety Company have been examined and approved, and authorizes its Chairman to execute the Resolution.

Adopted this 3rd day of December, 2018.

Chairman
Moore County Board of Commissioners

COUNTY OF MOORE CORPORATE SEAL NORTH CAROLINA

Laura M. Williams
Clerk to the Board

Appendix B
12/3/2018

Fiscal Year 2018/2019

	Budget Line Item Number		Budgeted Amount	Increase/ (Decrease)	Revised Budget
	Public Safety/EMS - Donations				
Revenue	20018000 32502	Donations	-	960	960
Expense	20048000 52350	Recognition/Retreat	-	960	960

Approved this 3 day of December, 2018

Catherine Graham
Moore County Board of Commissioners

Laura Williams
Clerk to the Board

COUNTY OF MOORE CORPORATE SEAL NORTH CAROLINA

60001

Fiscal Year 2018/2019

	Budget Line Item Number		Budgeted Amount	Increase/ (Decrease)	Revised Budget
Day Reporting Center - Moore County Alcoholic Beverage Control Board					
Revenue	24033009 36074	ABC-Revenues	162,108	15,000	177,108
Expense	24020009 53801	ABC-Alcohol Education	175,108	15,000	190,108

Approved this 3 day of December, 2018

Catherine Graham
Moore County Board of Commissioners

Laura Williams
Clerk to the Board

COUNTY OF MOORE CORPORATE SEAL NORTH CAROLINA

60002

Fiscal Year 2018/2019

	Budget Line Item Number		Budgeted Amount	Increase/ (Decrease)	Revised Budget
	Public Safety - Emergency Management Planning Grant for 2018				
Revenue	24032010 36076 PS194	Emergency Management Perf	-	35,000	35,000
Expense	24021010 53832 PS194	Emergency Management Perf	-	35,000	35,000

Approved this 3 day of December, 2018

Catherine Graham
Moore County Board of Commissioners

Laura Williams
Clerk to the Board

COUNTY OF MOORE CORPORATE SEAL NORTH CAROLINA

60004

Appendix C
12/3/2018

RESOLUTION AUTHORIZING THE UPSET BID PROCESS FOR "SEVEN LAKES SOUTH WELL SITE", LRK#00026840

WHEREAS, the County of Moore owns certain real property located at 156 Patterson Lane, West End, Moore County, North Carolina, being known and more particularly described as "SEVEN LAKES SOUTH WELL SITE," LRK#00026840; and

WHEREAS, as part of the transaction, the purchaser will be required to hold the County harmless against any and all claims or damages that may arise as the result of acquiring or owning the property; and

WHEREAS, North Carolina General Statute 160A-269 permits the County to sell real property by negotiated offer and upset bid; and

WHEREAS, the Board of Commissioners acknowledges receipt of an offer from Mr. Otis Wayne Kennedy in the amount of $6,000.00 for the property described above; and

WHEREAS, Mr. Kennedy has paid the required five percent deposit on his offer.

NOW, THEREFORE, the Board of Commissioners of the County of Moore resolves that:

1. The Board of Commissioners authorizes sale of the property described above through the upset bid procedure of North Carolina General Statute 160A-269; and

2. The Clerk to the Board shall cause a notice of the proposed sale to be published. The notice shall describe the property and the amount of the offer, and shall state the terms under which the offer may be upset; and

3. Any person may submit an upset bid to the office of the Clerk to the Board within 10 days after the notice of sale is published. In order for a bid to be considered, the bidder must be current on payment of all property taxes owed to the County; and

4. If a qualifying higher bid is received, the Clerk to the Board shall cause a new notice of upset bid to be published, and shall continue to do so until a 10-day period has passed without any qualifying upset bid having been received. At that time, the amount of the final high bid shall be reported to the Board of Commissioners; and

5. A qualifying higher bid is one that raises the existing offer by not less than ten percent (10%) of the first $1,000.00 of that offer and five percent (5%) of the remainder of that offer; and

6. A qualifying higher bid must also be accompanied by a deposit in the amount of five percent (5%) of the bid; the deposit may be made in cash, cashier's check, or certified check. The County will return the deposit on any bid not accepted, and will return the

deposit on an offer subject to upset if a qualifying higher bid is received. The County will return the deposit of the final high bidder at closing if requested; and

7. The terms of the final sale are:

    - The property is sold in its current condition, as is, and the County gives no warranty with respect to usability of the property; and
    - The County must approve the final high bid before the sale is closed; and
    - Closing will occur within 60 days of approval of the final bid at the Office of the Moore County Attorney; and
    - The County will issue a non-warranty deed; and
    - The Buyer is responsible for ad valorem taxes for the current year (non-prorated); and
    - The Buyer must pay with cash, by cashier's check or by certified check at the time of the closing.

8. The County reserves the right to withdraw the property from sale at any time before the final high bid is approved and the right to reject at any time all bids; and

9. If no qualifying upset bid is received then the initial bid is approved as the final bid and the sale of the property is authorized for the amount of the initial bid, and the Chairman is authorized to execute the deed and transfer title to the purchaser.

ADOPTED this 3rd day of December 2018 by the Moore County Board of Commissioners.

COUNTY OF MOORE

Chairman
Moore County Board of Commissioners

ATTEST:

Laura M. Williams, Clerk to the Board

COUNTY OF MOORE CORPORATE SEAL NORTH CAROLINA

Appendix D
12/3/2018

Fee Schedule

Sheriff's Office

Mission:

The mission of the Moore County Sheriff's Office is to improve the quality of life for the citizens of Moore County by providing a safe community in which the citizens can live, work and prosper.

Fee Schedule - Item	FY18/19 Fee Amount
In-State Civil Process Service Fee N.C. General Statute 7A-311 Currently $30.00	Set by State
Out-of-State Civil Process Service Fee N.C. General Statute 7A-311	$100.00
Concealed Handgun Permit N.C. General Statute 14-415.19 Currently $90.00	Set by State
Document Notarization N.C. General Statute 10A-10 Currently $5.00	Set by State
Storage fees for weapons and ammunition stored pursuant to a Domestic Violence Orders. A fee of $30.00 will be charged for the storage of one weapon. A fee of $5.00 will be charged for each additional weapon. If a weapon is stored, a fee of $5.00 will be charge for the storage of any ammunition. If a weapon is not stored, a fee of $30 will be charged for the storage of any ammunition.	$30.00
The resident county of a person who is transported to a mental health facility by the Sheriff's Office will be billed for the mental transport at a rate of $30 per hour per deputy	$30.00
Fingerprints - A fee of $10.00 will be charged for fingerprints.	$10.00
Noise Ordinance Permit	$25.00
Reports for Insurance Companies	$2.00
Change of Name or Address for a Concealed Carry Permit, NCGS 14-415.19	Set by Statute
Replacement of Access Cards (does not apply to normal wear and tear) NEW	$5.00 per card
Off Duty Special Assignments for Deputies	$50.00/hour
Off Duty Special Assignments on Holidays for Deputies	$70.00/hour

Appendix E
12/3/2018

RESOLUTION TO AMEND SECTION 10. OF THE MOORE COUNTY BUDGET ORDINANCE FOR FISCAL YEAR 2018-2019 FOR THE REMOVAL AND ADDITION OF INDIVIDUALS AUTHORIZED TO SIGN CHECKS IN TRUST AND AGENCY FUNDS

WHEREAS, the Moore County Board of Commissioners require individuals authorized to sign checks in Trust and Agency Funds to be designated Special Deputy Finance Officer for this purpose; and

WHEREAS, Neil Godfrey, Sheriff, needs to be removed from the list of persons authorized to sign checks (due to his retirement) effective December 1, 2018; and

WHEREAS, Frank Rodriguez, Chief Deputy, needs to be removed from the list of persons authorized to sign checks effective December 1, 2018; and

WHEREAS, Ronnie Fields, Sheriff, needs to be added to the list of persons authorized to sign checks effective December 3, 2018; and

WHEREAS, Richard Maness, Chief Deputy, needs to be added to the list of persons authorized to sign checks effective December 3, 2018; and

WHEREAS, Andy Conway, Major, needs to be added to the list of persons authorized to sign checks effective December 3, 2018; and

WHEREAS, the Board hereby declares that the following individuals are authorized to sign checks on the County of Moore Sheriff's Department Civil Fund and the Inmate Trust Fund and amends the FY18/19 Moore County Budget Ordinance as follows:

Ronnie Fields – Sheriff
Richard Maness – Chief Deputy
Andy Conway - Major
James Furr – Captain
Bill Flint - Lieutenant
Lydia Craven – Administrative Asst II
Vonda Purvis – Administrative Asst II

NOW THEREFORE BE IT RESOLVED that the names listed above are authorized signer on the Moore County Sheriff's Department Civil Fund and the Inmate Trust Fund.

Adopted this 3rd day of December 2018.

Chairman
Moore County Board of Commissioners

Laura M. Williams, Clerk to the Board

COUNTY OF MOORE CORPORATE SEAL NORTH CAROLINA

Appendix F
12/3/2018

Moore County Board of Commissioners
Land Use Plan Consistency Statement
Text Amendment - Unified Development Ordinance

The Moore County Board of Commissioners finds that:

1. The text amendment request is consistent with the following goals in the 2013 Moore County Land Use Plan:

Goal 1: Preserve and Protect the Ambiance and Heritage of the County of Moore (inclusive of areas around municipalities):

- Recommendation 1.5: Encourage and support development and land use principles by ensuring Moore County's cultural, economic, and natural resources are considered appropriately.

Goal 4: Provide Information and Seek Citizen Participation:

- Action 4.1.1: Continue to support and implement easy to understand guidelines to incorporate throughout governmental departments.

2. The text amendment is consistent with the goals listed above by zoning adult and general gaming establishments within appropriate zoning districts, while ensuring Moore County's cultural and economic resources are considered. Also, the Land Use Plan calls for the adoption of straightforward standards and procedures. By addressing temporary housing during disasters, the county is providing clear guidelines.

3. The text amendment is reasonable and in the public interest because the ordinance has been updated to zone adult and general gaming establishments appropriately, within certain zoning districts within the County, in consideration that adult gaming establishments may have negative secondary impacts on surrounding land uses particularly residential uses. By differentiating between adult and general gaming establishments, the text amendment is also easily understood by developers and the general public. Also, accommodating for temporary housing during disaster relief ensures that the public is given the opportunity to recover after an unfortunate event.

Therefore, the Moore County Board of Commissioners **APPROVES** the text amendments to the Unified Development Ordinance, as proposed.

Chair
Moore County Board of Commissioners

12/3/18
Date

COUNTY OF MOORE
CORPORATE
SEAL
NORTH CAROLINA

Agenda Item: X.A.
Meeting Date: **December 3, 2018**

MEMORANDUM TO THE BOARD OF COMMISIONERS

FROM: **Debra Ensminger**
Planning and Transportation Director

DATE: **November 7, 2018**

SUBJECT: **Unified Development Ordinance Text Amendment**

PRESENTER: **Debra Ensminger**

REQUEST
Moore County Planning Staff is requesting the below text amendments to the Moore County Unified Development Ordinance:

Bold Text – additions to the ordinance
~~Strikethrough Text~~ - deletions from the ordinance

1. AMEND Chapter 6 (Table of Uses), Section 6.1 (Table of Uses) to add Adult Gaming Establishments as a conditional use:

COMMERCIAL USES	RA-20	RA-40	RA-2	RA-5	GCSL	GCWL	RE	RA-USB	RA	P-C	VB	B-1	B-2	I	Specific Use Standards	Bldg. Code Group
ADULT USES																
Adult Gaming Establishments														**C**	**8.52**	**B**
Bars / Tavern											C		P		8.53	A-2
Brewery / Winery									C		P		P	P	8.54	A-2, F
Dance Club, Night Club, Billiard											Z		P		8.55	A-2, A-3
Distillery														P	8.56	F-1
Massage & Bodywork Therapy Practice, Unlicensed													P		8.57	B
Pawn Shop											Z		P	P	8.58	B
Sexually Oriented Business														Z	8.59	A-2, M
Tattoo Parlor, Body Piercing													P		8.60	B

REASON. New language reflects the need of adult gaming establishments.

2. ADD Chapter 8 (Specific-Use Standards), Section 8.52 (Adult Gaming Establishments) as follows:

   A. **<u>Definition</u>. Any establishment deemed legal by state law, featuring 1 or more stand-alone electronic or conventional gaming units, skill-based or otherwise, or serving 1 or more patrons in such a capacity at any one time, which also rewards patrons with cash or other monetary payments, goods or certificates for services which are redeemable for cash or other monetary payment on or off premise and including on-line redemptions, as well as any rewards which cannot be legally obtained, consumed, or otherwise used by minors. Any use meeting this definition shall be considered a primary use regardless of association or location in conjunction with other permissible primary uses. State of North Carolina sanctioned lottery functions shall not be considered as adult gaming establishments for the purposes of this ordinance.**

   B. **<u>Standards</u>. All buildings, outdoor seating/ entertainment, and parking areas shall be 50 feet from any residentially zoned property line. 1 parking space for each 2 people at full capacity. No more than 4 machines per location.**

REASON. New language reflects the need of adult gaming establishments due to recent inquiries.

3. AMEND Chapter 8 (Specific-Use Standards), Section 8.85 (Indoor Recreation) as follows:

   A. <u>Definition</u>. A fully enclosed facility providing for one or several recreational uses including sport auditoriums (basketball, dance, martial arts, soccer, swimming, tennis, wrestling), batting cages, bowling alleys, skating rinks, and other recreational uses such as non-profit community centers, non-profit youth club facilities, health and fitness clubs, gyms, ~~and~~ movie theatres, **and general gaming establishments**.

   B. **<u>General Gaming Establishment</u>. Any establishment deemed legal by state law, excluding billiards halls, adult gaming establishments and any others similarly defined in this chapter, whose primary use is to provide entertainment services to the general public in the form of electronic or conventional gaming units which provide either no reward to patrons or rewards of limited value such as children's toys, games, and novelties when all of said rewards can be legally obtained and used by all ages and are not redeemable for cash or any other kind of compensation or services on or off premises, including on-line redemptions. Examples include traditional video game arcades and children's and family game centers, whether stand-alone or in conjunction with a restaurant or other permissible uses. This shall be considered a primary use when occupying more than 50 percent of the gross floor area of an establishment or being used by more than 50 percent of the patrons at any time or representing more than 50 percent of the total sales of the establishment.**

C. Standards. All buildings and parking shall be located a minimum 50 feet from any residentially zoned property line. 1 parking space for every 2 participants at full capacity.

REASON. New language reflects the need of general gaming establishments due to recent inquiries to establish said use within Moore County.

4. AMEND Chapter 8 (Specific-Use Standards), Section 8.111 (Manufactured Home or Recreational Vehicle, Temporary Use) as follows:

A. Standards. A temporary dwelling may be permitted concurrently with or after the issuance of the building permit for the principal dwelling for up to 12 months, which may be extended once by the Administrator for an additional 6 month expiration of said eighteen-month period, the expiration of the building permit for the dwelling, or within 30 days of the Certificate of Occupancy, the temporary permit shall become invalid. **In the event of a natural disaster, manufactured homes, RVs, and FEMA trailers may be permitted, including on a separate lot, without a building permit being issued for the damaged home, and may receive multiple extensions beyond the 12 months for the temporary use, as determined necessary by the Zoning Administrator.**

REASON. New language reflects the need of temporary housing during a disaster relief.

CONSISTENCY WITH THE ADOPTED 2013 LAND USE PLAN

The Board of Commissioners Consistency Statement which speaks to Land Use Plan goals is included for the Board's review and consideration.

IMPLEMENTATION PLAN

Hold the public hearing and approve/deny the text amendment request.

FINANCIAL IMPACT STATEMENT

No financial impact to the County's FY 2018-2019 budget.

PLANNING BOARD RECOMMENDATION

The Planning Board met on November 1, 2018 and unanimously recommended approval.

RECOMMENDATION SUMMARY:

Staff recommends the Moore County Board of Commissioners to make two separate motions:

Motion #1: Make a motion to adopt the attached Moore County Board of Commissioners Land Use Plan Consistency Statement (Approval) and authorize the Chairman to execute the document as required by North Carolina General Statute 153A-341.

Motion #2: Make a motion to approve or deny the proposed text amendment to the Moore County Unified Development Ordinance.

ATTACHMENTS

- RLUAC (Regional Land Use Advisory Commission) Review Letter
- Board of Commissioners Land Use Plan Consistency Statement

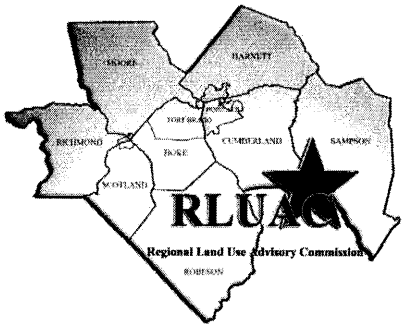

MOORE COUNTY
Proposed Text Amendments to the Unified Development Ordinance
To Allow Adult Gaming Establishments as a Conditional Use
Specifically Section 6.1 (Table of Uses) and Chapter 8
November 8, 2018

The Regional Land Use Advisory Commission (RLUAC) staff and Board of Directors have reviewed the proposed text amendments (listed above) for the Moore County Unified Development Ordinance and find no conflicts with the recommendations contained in the 2003 and 2008 Joint Land Use Studies

RLUAC therefore has no issues or concerns with the proposed text amendments to the Moore County Unified Development Ordinance.

Thank you for allowing RLUAC the opportunity to review these proposed changes.

Robert McLaughlin, Chairman

James Dougherty, Executive Director

* PO Drawer 1510 * Fayetteville * NC * 28302 * Tel: (910) 583-1233 * director@rluac.com *

Appendix G
12/3/2018

AMENDMENT TO

THE MOORE COUNTY ROAD NAME AND ADDRESSING ORDINANCE

ADOPTED JULY 10, 1989
AND AS SUBSEQUENTLY AMENDED

RESOLVED by the Board of Commissioners of the County of Moore that Section III ROAD NAMING OF THE ABOVE REFERENCED ORDINANCE BE AMENDED TO ADD, RENAME, OR REMOVE THE FOLLOWING ROADS AS INDICATED:

ADD:

PRESSLEY FARM LN (P4171) .....*Located on the north side of Union Church Rd (SR 1805). Approximately 750 ft east of Hulsey Rd (SR 1806).*

LITTLE RIVER RUN SUBDIVSION:
Located off Page Store Rd (SR 1172). West of Eaker Dr (Lee County road).

BURLEY OAK DR (P4172)
HIGH BRANCH DR (P4173)
STARPOINT DR (P4174)
SIERRA DR (P4175)
TWIN LEAF CT (P4176)

STAR RIDGE FARMS SUBDIVSION:
Located off Star Ridge Rd (SR 1834). Approximately 1200 ft east of NC 22 Hwy.

ALENDALE DR (P4177)
BASSETT CT (P4178)
DANBURY CT (P4179)
ENFIELD DR (P4180)
INGLESIDE LN (P4181)
STILLWATER CT (P4182)
WEATHERFORD LN (P4183)

AND, FURTHER, that the effective date of this amendment to the above described Ordinance shall be upon adoption.

Adopted this 3rd day of December, 2018.

Laura Williams, Clerk to the Board
Moore County Board of Commissioners

COUNTY OF MOORE CORPORATE SEAL NORTH CAROLINA

Chair
Moore County Board of Commissioners

Appendix H
12/3/2018

Agenda Item: XII.A.
Meeting Date: 12/3/18

MEMORANDUM TO BOARD OF DIRECTORS:

FROM: **Moore County Public Works / Solid Waste Division**

DATE: **November 26, 2018**

SUBJECT: **Fee Schedule Amendment for Moore County Landfill Transfer Station**

PRESENTER: **Chad Beane, Solid Waste & Recycling Division Manager**

REQUEST:
Approve the revised fee schedule for the Moore County Solid Waste Division.

BACKGROUND:
Recently the vendor that Moore County was under contract with to handle all recycling material gave notice to terminate the existing contract. With the recycling market in decline and the costs to haul and process recyclable material increasing dramatically, the Moore County Solid Waste Division is recommending an increase in tipping fees for recycling at the Moore County Transfer Station. Meeting was held with Utilities Task Force and also the municipalities that would be affected by this increase to inform them of changes in operations and also to field questions and concerns. The recycling market is such that it's a challenge to find a vendor that will accept the material and the costs to haul and process the material no longer is covered by the current rate of $25 per ton. Staff is recommending that the $25 per ton rate be amended to $100 per ton for Tipping Fee at the Moore County Landfill to cover these costs.

Also, the Tipping Fees for Construction & Demolition material was approved by the BOC based on the budgeted range of $46 - $48 per ton. This fee is based on CPI adjustments which had not been released at the time of fee schedule approval. Since that approval however the CPI adjustment was such that the fee is $48.07 per ton. With that said, we are asking the fee schedule reflect this adjustment and ask that the Board approve the new tipping fee for Construction and Demolition material at $48.07 per ton. Basically a $.07 increase from the previous approved Fee Schedule for the Solid Waste Division.

IMPLEMENTATION PLAN:
The implementation of the revised Fee Schedule would be put into place immediately following approval from the BOC. December 4, 2018 would be the immediate effective date to begin charging accordingly and staff can implement this plan upon BOC approval.

FINANCIAL IMPACT STATEMENT:
- The revised fee schedule is proposed to cover the costs to accept, haul and process the recycling material.
-No substantial financial impact for adjusting the Tipping Fee Schedule for Construction & Demolition material.

RECOMMENDATION SUMMARY:
Make a motion to approve the revised fee schedule for the Solid Waste Division.

SUPPORTING ATTACHMENTS: Revised Fee Schedule

Fee Schedule

Public Works - Solid Waste Division

Mission:

Public Works - Solid Waste Division provides excellent customer service and high regard for safety and preserving the environment by providing a highly organized and efficient system of recycling, solid waste collection and disposal services

Fee Schedule - Item	FY18/19 Fee Amount
Tipping Fees - (Construction & Demolition Materials; Land Clearing; Inert Debris) *% increase determined by CPI Adjustment*. Includes $2.00 NC Excise Tax.	$46.00-$48.00 (***To match Uwharie Environmental transfer station fee once CPI adjustment is published/released) Change to $48.07/ton***
C&D Minimum Charge	$5.00 minimum
Weigh Ticket (Truck wt. Only)	$10.00 / each
In the unlikely event of scale malfunctions or loss of electrical power rendering the scale inoperable, the following rates will apply:	
Construction Materials	$8.00 per cubic yard
Demolition Materials	$8.00 per cubic yard
Land Clearing Materials	$8.00 per cubic yard
Yard Waste Materials	$20.00/ton
Flat Rate charge	$5.00 minimum
Recycling Tipping Fee	$25.00 - $30.00/ton to $100/ton
Mobile Home Disposal:	
Single Wide	$500.00 / each
Double Wide	$700.00 / each
Container Storage Fee: (Landfill Property)	
0 - 30 Roll-off Containers	$300.00 / month
Fees are hereby waived for all General Fund departments for Solid Waste/Landfill Fees debris	

Appendix I
12/3/2018

Resolution Adopting the 2018 North Carolina State Building Code: 2018 Fire Code Appendixes

WHEREAS, For the purpose of prescribing regulations governing conditions hazardous to life and property from fire or explosion, the Moore County Board of Commissioners adopted a certain code known as the North Carolina Fire Code, as approved by the North Carolina Building Code Council and shall include subsequent amendments that are adopted pursuant to state law. An official copy of the code shall be filed in the office of the fire marshal. The code is adopted and incorporated as if fully set forth at length in this article, and the provisions thereof shall be controlling in all areas of the county not governed by a city or town, and as otherwise provided for through agreements with participating municipalities within the county. (Moore County Public Safety Ord. of 1-19-16)

WHEREAS, the North Carolina State Building Code Council has abolished use of the 2009 edition of the International Fire Code as enacted and published by the 2012 North Carolina Building Code Council- Fire Code and has chosen to enforce the 2015 edition of the International Fire Code, with the 2018 North Carolina Amendments as enacted and published by the International Code Council; and,

WHEREAS, County Commissioners now desire to act and this amendment and move to modify the Fire Prevention Code, Fees, Penalties Schedule and adopt the Appendixes of the County Of Moore to implement this revision:

NOW, THEREFORE, BE IT AND IT IS HEREBY RESOLVED, that the Moore County Board of Commissioners hereby;

1. The Fire Prevention Code, Fees, Penalties Schedule, and Appendixes is hereby amended by repealing the reference and use for the 2009 edition of the International Fire Code with 2012 North Carolina Amendment and replace it with the 2015 edition of the International Fire Code, with the 2018 North Carolina Amendments.

2. The following appendixes are adopted as part of the 2015 edition of the International Fire Code with 2018 North Carolina Amendments:

Appendix B – Fire-Flow Requirements for Buildings
Appendix C – Fire Hydrant Location and Distribution
Appendix D – Fire Apparatus Access Roads
Appendix E – Hazard Categories
Appendix F – Hazard Ranking
Appendix G – Cryogenic Fluids – Weight and Volume Equivalents
Appendix H – Hazardous Materials Management Plan (HMMP) and Hazardous Materials Inventory Statement (HMIS) Instruction
Appendix J – Building Information Sign
Appendix A – Board of Appeals, **Appendix I** – Fire Protection System – Non-Compliant, **Appendix K** – Construction Requirements for Existing Ambulatory Care Facilities, **Appendix M** – High-Rise Buildings – Retroactive Automatic Sprinkler Requirements - Deleted
Appendix L – Requirements for Fire Fighter Air Replenishment Systems – Not recommended to adoption

Adopted on December 3, 2018

Chairman
Moore County Board of Commissioners

ATTEST:
Laura M. Williams, Clerk

COUNTY OF MOORE CORPORATE SEAL NORTH CAROLINA

APPENDIX A

BOARD OF APPEALS

Deleted.

APPENDIX B

FIRE-FLOW REQUIREMENTS FOR BUILDINGS

The provisions contained in this appendix are not mandatory unless specifically referenced in the adopting ordinance.

SECTION B101
GENERAL

B101.1 Scope. The procedure for determining fire-flow requirements for buildings or portions of buildings hereafter constructed shall be in accordance with this appendix. This appendix does not apply to structures other than buildings.

SECTION B102
DEFINITIONS

B102.1 Definitions. For the purpose of this appendix, certain terms are defined as follows:

FIRE-FLOW. The flow rate of a water supply, measured at 20 pounds per square inch (psi) (138 kPa) residual pressure, that is available for fire fighting.

FIRE-FLOW CALCULATION AREA. The floor area, in square feet (m^2), used to determine the required fire flow.

SECTION B103
MODIFICATIONS

B103.1 Decreases. The fire chief is authorized to reduce the fire-flow requirements for isolated buildings or a group of buildings in rural areas or small communities where the development of full fire-flow requirements is impractical.

B103.2 Increases. The fire chief is authorized to increase the fire-flow requirements where conditions indicate an unusual susceptibility to group fires or conflagrations. An increase shall not be more than twice that required for the building under consideration.

B103.3 Areas without water supply systems. For information regarding water supplies for fire-fighting purposes in rural and suburban areas in which adequate and reliable water supply systems do not exist, the *fire code official* is authorized to utilize NFPA 1142 or the *International Wildland-Urban Interface Code.*

SECTION B104
FIRE-FLOW CALCULATION AREA

B104.1 General. The fire-flow calculation area shall be the total floor area of all floor levels within the *exterior walls*, and under the horizontal projections of the roof of a building, except as modified in Section B104.3.

B104.2 Area separation. Portions of buildings which are separated by *fire walls* without openings, constructed in accordance with the *International Building Code*, are allowed to be considered as separate fire-flow calculation areas.

B104.3 Type IA and Type IB construction. The fire-flow calculation area of buildings constructed of Type IA and Type IB construction shall be the area of the three largest successive floors.

Exception: Fire-flow calculation area for open parking garages shall be determined by the area of the largest floor.

SECTION B105
FIRE-FLOW REQUIREMENTS FOR BUILDINGS

B105.1 One- and two-family dwellings, Group R-3 and R-4 buildings and townhouses. The minimum fire-flow and flow duration requirements for one- and two-family *dwellings*, Group R-3 and R-4 buildings and townhouses shall be as specified in Tables B105.1(1) and B105.1(2).

B105.2 Buildings other than one- and two-family dwellings, Group R-3 and R-4 buildings and townhouses. The minimum fire-flow and flow duration for buildings other than one- and two-family *dwellings*, Group R-3 and R-4 buildings and townhouses shall be as specified in Tables B105.2 and B105.1(2).

TABLE B105.1(1)
REQUIRED FIRE-FLOW FOR ONE- AND TWO-FAMILY DWELLINGS, GROUP R-3 AND R-4 BUILDINGS AND TOWNHOUSES

FIRE-FLOW CALCULATION AREA (square feet)	AUTOMATIC SPRINKLER SYSTEM (Design Standard)	MINIMUM FIRE-FLOW (gallons per minute)	FLOW DURATION (hours)
0-3,600	No automatic sprinkler system	1,000	1
3,601 and greater	No automatic sprinkler system	Value in Table B105.1(2)	Duration in Table B105.1(2) at the required fire-flow rate
0-3,600	Section 903.3.1.3 of the *International Fire Code* or Section P2904 of the *International Residential Code*	500	½
3,601 and greater	Section 903.3.1.3 of the *International Fire Code* or Section P2904 of the *International Residential Code*	½ value in Table B105.1(2)	1

For SI: 1 square foot = 0.0929 m^2, 1 gallon per minute = 3.785 L/m.

TABLE B105.1(2)
REFERENCE TABLE FOR TABLES B105.1(1) AND B105.2

FIRE-FLOW CALCULATION AREA (square feet)					FIRE-FLOW (gallons per minute)[b]	FLOW DURATION (hours)
Type IA and IB[a]	Type IIA and IIIA[a]	Type IV and V-A[a]	Type IIB and IIIB[a]	Type V-B[a]		
0-22,700	0-12,700	0-8,200	0-5,900	0-3,600	1,500	2
22,701-30,200	12,701-17,000	8,201-10,900	5,901-7,900	3,601-4,800	1,750	
30,201-38,700	17,001-21,800	10,901-12,900	7,901-9,800	4,801-6,200	2,000	
38,701-48,300	21,801-24,200	12,901-17,400	9,801-12,600	6,201-7,700	2,250	
48,301-59,000	24,201-33,200	17,401-21,300	12,601-15,400	7,701-9,400	2,500	
59,001-70,900	33,201-39,700	21,301-25,500	15,401-18,400	9,401-11,300	2,750	
70,901-83,700	39,701-47,100	25,501-30,100	18,401-21,800	11,301-13,400	3,000	3
83,701-97,700	47,101-54,900	30,101-35,200	21,801-25,900	13,401-15,600	3,250	
97,701-112,700	54,901-63,400	35,201-40,600	25,901-29,300	15,601-18,000	3,500	
112,701-128,700	63,401-72,400	40,601-46,400	29,301-33,500	18,001-20,600	3,750	
128,701-145,900	72,401-82,100	46,401-52,500	33,501-37,900	20,601-23,300	4,000	4
145,901-164,200	82,101-92,400	52,501-59,100	37,901-42,700	23,301-26,300	4,250	
164,201-183,400	92,401-103,100	59,101-66,000	42,701-47,700	26,301-29,300	4,500	
183,401-203,700	103,101-114,600	66,001-73,300	47,701-53,000	29,301-32,600	4,750	
203,701-225,200	114,601-126,700	73,301-81,100	53,001-58,600	32,601-36,000	5,000	
225,201-247,700	126,701-139,400	81,101-89,200	58,601-65,400	36,001-39,600	5,250	
247,701-271,200	139,401-152,600	89,201-97,700	65,401-70,600	39,601-43,400	5,500	
271,201-295,900	152,601-166,500	97,701-106,500	70,601-77,000	43,401-47,400	5,750	
295,901-Greater	166,501-Greater	106,501-115,800	77,001-83,700	47,401-51,500	6,000	
—	—	115,801-125,500	83,701-90,600	51,501-55,700	6,250	
—	—	125,501-135,500	90,601-97,900	55,701-60,200	6,500	
—	—	135,501-145,800	97,901-106,800	60,201-64,800	6,750	
—	—	145,801-156,700	106,801-113,200	64,801-69,600	7,000	
—	—	156,701-167,900	113,201-121,300	69,601-74,600	7,250	
—	—	167,901-179,400	121,301-129,600	74,601-79,800	7,500	
—	—	179,401-191,400	129,601-138,300	79,801-85,100	7,750	
—	—	191,401-Greater	138,301-Greater	85,101-Greater	8,000	

For SI: 1 square foot = 0.0929 m^2, 1 gallon per minute = 3.785 L/m, 1 pound per square inch = 6.895 kPa.
a. Types of construction are based on the *International Building Code*.
b. Measured at 20 psi residual pressure.

TABLE B105.2
REQUIRED FIRE-FLOW FOR BUILDINGS OTHER THAN ONE- AND TWO-FAMILY DWELLINGS, GROUP R-3 AND R-4 BUILDINGS AND TOWNHOUSES

AUTOMATIC SPRINKLER SYSTEM (Design Standard)	MINIMUM FIRE-FLOW (gallons per minute)	FLOW DURATION (hours)
No automatic sprinkler system	Value in Table B105.1(2)	Duration in Table B105.1(2)
Section 903.3.1.1 of the *International Fire Code*	25% of the value in Table B105.1(2)[a]	Duration in Table B105.1(2) at the reduced flow rate
Section 903.3.1.2 of the *International Fire Code*	25% of the value in Table B105.1(2)[b]	Duration in Table B105.1(2) at the reduced flow rate

For SI: 1 gallon per minute = 3.785 L/m.
a. The reduced fire-flow shall be not less than 1,000 gallons per minute.
b. The reduced fire-flow shall be not less than 1,500 gallons per minute.

B105.3 Water supply for buildings equipped with an automatic sprinkler system. For buildings equipped with an approved *automatic sprinkler system*, the water supply shall be capable of providing the greater of:

1. The *automatic sprinkler system* demand, including hose stream allowance.
2. The required fire-flow.

SECTION B106
REFERENCED STANDARDS

ICC	IBC—15	International Building Code	B104.2,
ICC	IFC—15	International Fire Code	Tables B105.1(1) and B105.2
ICC	IWUIC—15	International Wildland-Urban Interface Code	B103.3
ICC	IRC—15	International Residential Code	Table B105.1(1)
NFPA	1142—12	Standard on Water Supplies for Suburban and Rural Fire Fighting	B103.3

APPENDIX C

FIRE HYDRANT LOCATIONS AND DISTRIBUTION

The provisions contained in this appendix are not mandatory unless specifically referenced in the adopting ordinance.

SECTION C101
GENERAL

C101.1 Scope. In addition to the requirements of Section 507.5.1 of the *International Fire Code*, fire hydrants shall be provided in accordance with this appendix for the protection of buildings, or portions of buildings, hereafter constructed or moved into the jurisdiction.

SECTION C102
NUMBER OF FIRE HYDRANTS

C102.1 Minimum number of fire hydrants for a building. The number of fire hydrants available to a building shall be not less than the minimum specified in Table C102.1.

SECTION C103
FIRE HYDRANT SPACING

C103.1 Hydrant spacing. Fire apparatus access roads and public streets providing required access to buildings in accordance with Section 503 of the *International Fire Code* shall be provided with one or more fire hydrants, as determined by Section C102.1. Where more than one fire hydrant is required, the distance between required fire hydrants shall be in accordance with Sections C103.2 and C103.3.

C103.2 Average spacing. The average spacing between fire hydrants shall be in accordance with Table C102.1.

Exception: The average spacing shall be permitted to be increased by 10 percent where existing fire hydrants provide all or a portion of the required number of fire hydrants.

C103.3 Maximum spacing. The maximum spacing between fire hydrants shall be in accordance with Table C102.1.

SECTION C104
CONSIDERATION OF EXISTING FIRE HYDRANTS

C104.1 Existing fire hydrants. Existing fire hydrants on public streets are allowed to be considered as available to meet the requirements of Sections C102 and C103. Existing fire hydrants on adjacent properties are allowed to be considered as available to meet the requirements of Sections C102 and C103 provided that a fire apparatus access road extends between properties and that an easement is established to prevent obstruction of such roads.

TABLE C102.1
REQUIRED NUMBER AND SPACING OF FIRE HYDRANTS

FIRE-FLOW REQUIREMENT (gpm)	MINIMUM NUMBER OF HYDRANTS	AVERAGE SPACING BETWEEN HYDRANTS[a, b, e, f, g] (feet)	MAXIMUM DISTANCE FROM ANY POINT ON STREET OR ROAD FRONTAGE TO A HYDRANT[d, f, g]
1,750 or less	1	500	250
2,000-2,250	2	450	225
2,500	3	450	225
3,000	3	400	225
3,500-4,000	4	350	210
4,500-5,000	5	300	180
5,500	6	300	180
6,000	6	250	150
6,500-7,000	7	250	150
7,500 or more	8 or more[c]	200	120

For SI: 1 foot = 304.8 mm, 1 gallon per minute = 3.785 L/m.

a. Reduce by 100 feet for dead-end streets or roads.

b. Where streets are provided with median dividers that cannot be crossed by fire fighters pulling hose lines, or where arterial streets are provided with four or more traffic lanes and have a traffic count of more than 30,000 vehicles per day, hydrant spacing shall average 500 feet on each side of the street and be arranged on an alternating basis.

c. Where new water mains are extended along streets where hydrants are not needed for protection of structures or similar fire problems, fire hydrants shall be provided at spacing not to exceed 1,000 feet to provide for transportation hazards.

d. Reduce by 50 feet for dead-end streets or roads.

e. One hydrant for each 1,000 gallons per minute or fraction thereof.

f. A 50-percent spacing increase shall be permitted where the building is equipped throughout with an approved automatic sprinkler system in accordance with Section 903.3.1.1 of the *International Fire Code*.

g. A 25-percent spacing increase shall be permitted where the building is equipped throughout with an approved automatic sprinkler system in accordance with Section 903.3.1.2 or 903.3.1.3 of the *International Fire Code* or Section P2904 of the *International Residential Code*.

SECTION C105
REFERENCED STANDARDS

ICC	IFC—15	International Fire Code	C101.1, C103.1, Table C102.1
ICC	IRC—15	International Residential Code	Table C102.1

APPENDIX D

FIRE APPARATUS ACCESS ROADS

The provisions contained in this appendix are not mandatory unless specifically referenced in the adopting ordinance.

SECTION D101
GENERAL

D101.1 Scope. Fire apparatus access roads shall be in accordance with this appendix and all other applicable requirements of the *International Fire Code.*

SECTION D102
REQUIRED ACCESS

D102.1 Access and loading. Facilities, buildings or portions of buildings hereafter constructed shall be accessible to fire department apparatus by way of an *approved* fire apparatus access road with an asphalt, concrete or other *approved* driving surface capable of supporting the imposed load of fire apparatus weighing at least 75,000 pounds (34 050 kg).

SECTION D103
MINIMUM SPECIFICATIONS

D103.1 Access road width with a hydrant. Where a fire hydrant is located on a fire apparatus access road, the minimum road width shall be 26 feet (7925 mm), exclusive of shoulders (see Figure D103.1).

D103.2 Grade. Fire apparatus access roads shall not exceed 10 percent in grade.

Exception: Grades steeper than 10 percent as *approved* by the fire chief.

D103.3 Turning radius. The minimum turning radius shall be determined by the *fire code official.*

D103.4 Dead ends. Dead-end fire apparatus access roads in excess of 150 feet (45 720 mm) shall be provided with width and turnaround provisions in accordance with Table D103.4.

TABLE D103.4
REQUIREMENTS FOR DEAD-END FIRE APPARATUS ACCESS ROADS

LENGTH (feet)	WIDTH (feet)	TURNAROUNDS REQUIRED
0-150	20	None required
151-500	20	120-foot Hammerhead, 60-foot "Y" or 96-foot diameter cul-de-sac in accordance with Figure D103.1
501-750	26	120-foot Hammerhead, 60-foot "Y" or 96-foot diameter cul-de-sac in accordance with Figure D103.1
Over 750	Special approval required	

For SI: 1 foot = 304.8 mm.

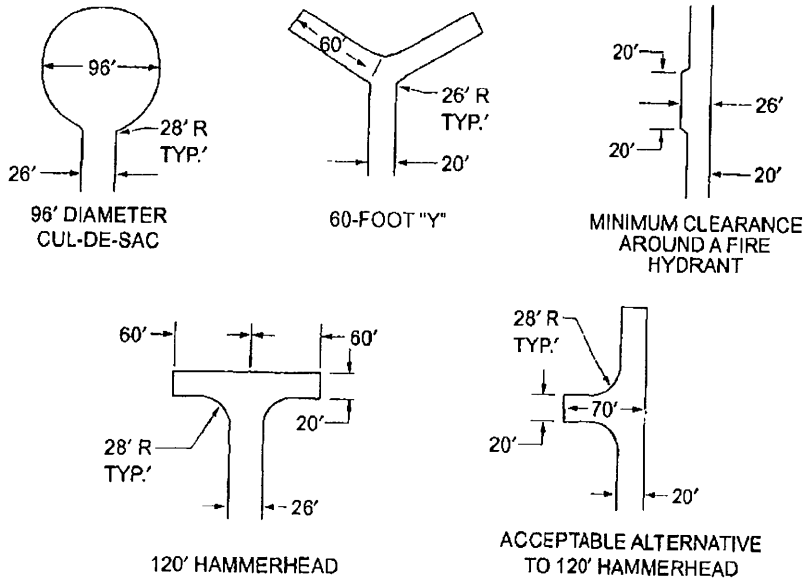

For SI: 1 foot = 304.8 mm.

FIGURE D103.1
DEAD-END FIRE APPARATUS ACCESS ROAD TURNAROUND

D103.5 Fire apparatus access road gates. Gates securing the fire apparatus access roads shall comply with all of the following criteria:

1. Where a single gate is provided, the gate width shall be not less than 20 feet (6096 mm). Where a fire apparatus road consists of a divided roadway, the gate width shall be not less than 12 feet (3658 mm).
2. Gates shall be of the swinging or sliding type.
3. Construction of gates shall be of materials that allow manual operation by one person.
4. Gate components shall be maintained in an operative condition at all times and replaced or repaired when defective.
5. Electric gates shall be equipped with a means of opening the gate by fire department personnel for emergency access. Emergency opening devices shall be *approved* by the *fire code official*.
6. Methods of locking shall be submitted for approval by the *fire code official*.
7. Electric gate operators, where provided, shall be *listed* in accordance with UL 325.
8. Gates intended for automatic operation shall be designed, constructed and installed to comply with the requirements of ASTM F2200.

D103.6 Signs. Where required by the *fire code official*, fire apparatus access roads shall be marked with permanent NO PARKING—FIRE LANE signs complying with Figure D103.6. Signs shall have a minimum dimension of 12 inches (305 mm) wide by 18 inches (457 mm) high and have red letters on a white reflective background. Signs shall be posted on one or both sides of the fire apparatus road as required by Section D103.6.1 or D103.6.2.

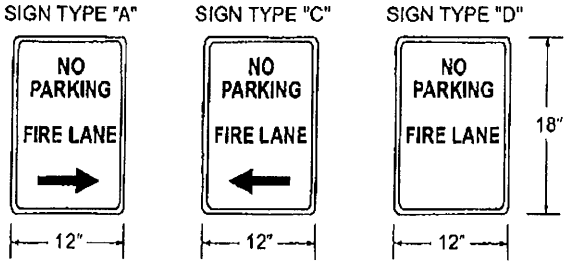

FIGURE D103.6
FIRE LANE SIGNS

D103.6.1 Roads 20 to 26 feet in width. Fire lane signs as specified in Section D103.6 shall be posted on both sides of fire apparatus access roads that are 20 to 26 feet wide (6096 to 7925 mm).

D103.6.2 Roads more than 26 feet in width. Fire lane signs as specified in Section D103.6 shall be posted on one side of fire apparatus access roads more than 26 feet wide (7925 mm) and less than 32 feet wide (9754 mm).

SECTION D104
COMMERCIAL AND INDUSTRIAL DEVELOPMENTS

D104.1 Buildings exceeding three stories or 30 feet in height. Buildings or facilities exceeding 30 feet (9144 mm) or three stories in height shall have at least two means of fire apparatus access for each structure.

D104.2 Buildings exceeding 62,000 square feet in area. Buildings or facilities having a gross *building area* of more than 62,000 square feet (5760 m^2) shall be provided with two separate and *approved* fire apparatus access roads.

Exception: Projects having a gross *building area* of up to 124,000 square feet (11 520 m^2) that have a single *approved* fire apparatus access road when all buildings are equipped throughout with *approved automatic sprinkler systems*.

D104.3 Remoteness. Where two fire apparatus access roads are required, they shall be placed a distance apart equal to not less than one half of the length of the maximum overall diagonal dimension of the lot or area to be served, measured in a straight line between accesses.

SECTION D105
AERIAL FIRE APPARATUS ACCESS ROADS

D105.1 Where required. Where the vertical distance between the grade plane and the highest roof surface exceeds 30 feet (9144 mm), approved aerial fire apparatus access roads shall be provided. For purposes of this section, the highest roof surface shall be determined by measurement to the eave of a pitched roof, the intersection of the roof to the exterior wall, or the top of parapet walls, whichever is greater.

D105.2 Width. Aerial fire apparatus access roads shall have a minimum unobstructed width of 26 feet (7925 mm), exclusive of shoulders, in the immediate vicinity of the building or portion thereof.

D105.3 Proximity to building. At least one of the required access routes meeting this condition shall be located within a minimum of 15 feet (4572 mm) and a maximum of 30 feet (9144 mm) from the building, and shall be positioned parallel to one entire side of the building. The side of the building on which the aerial fire apparatus access road is positioned shall be approved by the *fire code official*.

D105.4 Obstructions. Overhead utility and power lines shall not be located over the aerial fire apparatus access road or between the aerial fire apparatus road and the building. Other obstructions shall be permitted to be placed with the approval of the *fire code official*.

SECTION D106
MULTIPLE-FAMILY RESIDENTIAL DEVELOPMENTS

D106.1 Projects having more than 100 dwelling units. Multiple-family residential projects having more than 100 *dwelling units* shall be equipped throughout with two separate and *approved* fire apparatus access roads.

Exception: Projects having up to 200 *dwelling units* may have a single *approved* fire apparatus access road when all buildings, including nonresidential occupancies, are equipped throughout with *approved automatic sprinkler systems* installed in accordance with Section 903.3.1.1 or 903.3.1.2.

D106.2 Projects having more than 200 dwelling units. Multiple-family residential projects having more than 200 *dwelling units* shall be provided with two separate and *approved* fire apparatus access roads regardless of whether they are equipped with an *approved automatic sprinkler system.*

D106.3 Remoteness. Where two fire apparatus access roads are required, they shall be placed a distance apart equal to not less than one-half of the length of the maximum overall diagonal dimension of the property or area to be served, measured in a straight line between accesses.

SECTION D107
ONE- OR TWO-FAMILY RESIDENTIAL DEVELOPMENTS

D107.1 One- or two-family dwelling residential developments. Developments of one- or two-family dwellings where the number of *dwelling units* exceeds 30 shall be provided with two separate and *approved* fire apparatus access roads.

Exceptions:

1. Where there are more than 30 *dwelling units* on a single public or private fire apparatus access road and all *dwelling units* are equipped throughout with an *approved automatic sprinkler system* in accordance with Section 903.3.1.1, 903.3.1.2 or 903.3.1.3 of the *International Fire Code*, access from two directions shall not be required.
2. The number of *dwelling units* on a single fire apparatus access road shall not be increased unless fire apparatus access roads will connect with future development, as determined by the *fire code official.*

D107.2 Remoteness. Where two fire apparatus access roads are required, they shall be placed a distance apart equal to not less than one-half of the length of the maximum overall diagonal dimension of the property or area to be served, measured in a straight line between accesses.

SECTION D108
REFERENCED STANDARDS

ASTM	F2200—13	Standard Specification for Automated Vehicular Gate Construction	D103.5
ICC	IFC—15	International Fire Code	D101.1, D107.1
UL	325—02	Door, Drapery, Gate, Louver, and Window Operators and Systems, with Revisions through June 2013	D103.5

APPENDIX E

HAZARD CATEGORIES

This appendix is for information purposes and is not intended for adoption.

SECTION E101
GENERAL

E101.1 Scope. This appendix provides information, explanations and examples to illustrate and clarify the hazard categories contained in Chapter 50 of the *International Fire Code*. The hazard categories are based upon the DOL 29 CFR. Where numerical classifications are included, they are in accordance with nationally recognized standards.

This appendix should not be used as the sole means of hazardous materials classification.

SECTION E102
HAZARD CATEGORIES

E102.1 Physical hazards. Materials classified in this section pose a *physical hazard*.

E102.1.1 Explosives and blasting agents. The current UN/DOT classification system recognized by international authorities, the Department of Defense and others classifies all *explosives* as Class 1 materials. They are then divided into six separate divisions to indicate their relative hazard. There is not a direct correlation between the designations used by the old DOT system and those used by the current system nor is there correlation with the system (high and low) established by the Bureau of Alcohol, Tobacco, Firearms and Explosives (BATF). Table 5604.3 of the *International Fire Code* provides some guidance with regard to the current categories and their relationship to the old categories. Some items may appear in more than one division, depending on factors such as the degree of confinement or separation, by type of packaging, storage configuration or state of assembly.

In order to determine the level of hazard presented by *explosive materials*, testing to establish quantitatively their *explosive* nature is required. There are numerous test methods that have been used to establish the character of an *explosive material*. Standardized tests, required for finished goods containing *explosives* or *explosive materials* in a packaged form suitable for shipment or storage, have been established by UN/DOT and BATF. However, these tests do not consider key elements that should be examined in a manufacturing situation. In manufacturing operations, the condition and/or the state of a material may vary within the process. The in-process material classification and classification requirements for materials used in the manufacturing process may be different from the classification of the same material where found in finished goods depending on the stage of the process in which the material is found. A classification methodology must be used that recognizes the hazards commensurate with the application to the variable physical conditions as well as potential variations of physical character and type of *explosive* under consideration.

Test methods or guidelines for hazard classification of energetic materials used for in-process operations shall be *approved* by the *fire code official*. Test methods used shall be DOD, BATF, UN/DOT or other *approved* criteria. The results of such testing shall become a portion of the files of the jurisdiction and be included as an independent section of any Hazardous Materials Management Plan (HMMP) required by Section 5605.2.1 of the *International Fire Code*. Also see Section 104.7.2 of the *International Fire Code*.

Examples of materials in various Divisions are as follows:

1. Division 1.1 (High *Explosives*). Consists of *explosives* that have a mass explosion hazard. A mass explosion is one that affects almost the entire pile of material instantaneously. Includes substances that, where tested in accordance with *approved* methods, can be caused to detonate by means of a blasting cap where unconfined or will transition from *deflagration* to a *detonation* where confined or unconfined. Examples: dynamite, TNT, nitroglycerine, C-3, HMX, RDX, encased *explosives*, military ammunition.
2. Division 1.2 (Low *Explosives*). Consists of *explosives* that have a projection hazard, but not a mass explosion hazard. Examples: nondetonating encased *explosives*, military ammunition and the like.
3. Division 1.3 (Low *Explosives*). Consists of *explosives* that have a fire hazard and either a minor blast hazard or a minor projection hazard or both, but not a mass explosion hazard. The major hazard is radiant heat or violent burning, or both. Can be deflagrated where confined. Examples: smokeless powder, propellant *explosives*, display fireworks.
4. Division 1.4. Consists of *explosives* that pose a minor explosion hazard. The *explosive* effects are largely confined to the package and no projection of fragments of appreciable size or range is expected. An internal fire must not cause virtually instantaneous explosion of almost the entire contents of the package. Examples: squibs (nondetonating igniters), *explosive* actuators, *explosive* trains (low-level detonating cord).
5. Division 1.5 (Blasting Agents). Consists of very insensitive *explosives*. This division comprises substances that have a mass explosion hazard, but are so

insensitive that there is very little probability of initiation or of transition from burning to *detonation* under normal conditions of transport. Materials are not cap sensitive; however, they are mass detonating where provided with sufficient input. Examples: oxidizer and liquid fuel slurry mixtures and gels, ammonium nitrate combined with fuel oil.

6. Division 1.6. Consists of extremely insensitive articles that do not have a mass *explosive* hazard. This division comprises articles that contain only extremely insensitive detonating substances and that demonstrate a negligible probability of accidental initiation or propagation. Although this category of materials has been defined, the primary application is currently limited to military uses. Examples: Low vulnerability military weapons.

Explosives in each division are assigned a compatibility group letter by the Associate Administrator for Hazardous Materials Safety (DOT) based on criteria specified by DOTn 49 CFR. Compatibility group letters are used to specify the controls for the transportation and storage related to various materials to prevent an increase in hazard that might result if certain types of *explosives* were stored or transported together. Altogether, there are 35 possible classification codes for *explosives*, e.g., 1.1A, 1.3C, 1.4S, etc.

E102.1.2 Compressed gases. Examples include:

1. Flammable: acetylene, carbon monoxide, ethane, ethylene, hydrogen, methane. Ammonia will ignite and burn although its flammable range is too narrow for it to fit the definition of "Flammable gas."

   For binary mixtures where the hazardous component is diluted with a nonflammable gas, the mixture shall be categorized in accordance with CGA P-23.

2. Oxidizing: oxygen, ozone, oxides of nitrogen, chlorine and fluorine. Chlorine and fluorine do not contain oxygen but reaction with flammables is similar to that of oxygen.
3. *Corrosive*: ammonia, hydrogen chloride, fluorine.
4. Highly toxic: arsine, cyanogen, fluorine, germane, hydrogen cyanide, nitric oxide, phosphine, hydrogen selenide, stibine.
5. Toxic: chlorine, hydrogen fluoride, hydrogen sulfide, phosgene, silicon tetrafluoride.
6. Inert (chemically unreactive): argon, helium, krypton, neon, nitrogen, xenon.
7. Pyrophoric: diborane, dichloroborane, phosphine, silane.
8. Unstable (reactive): butadiene (unstabilized), ethylene oxide, vinyl chloride.

E102.1.3 Flammable and combustible liquids. Examples include:

1. Flammable liquids.

   Class IA liquids shall include those having *flash points* below 73°F (23°C) and having a *boiling point* at or below 100°F (38°C).

   Class IB liquids shall include those having *flash points* below 73°F (23°C) and having a *boiling point* at or above 100°F (38°C).

   Class IC liquids shall include those having *flash points* at or above 73°F (23°C) and below 100°F (38°C).

2. *Combustible liquids.*

   Class II liquids shall include those having *flash points* at or above 100°F (38°C) and below 140°F (60°C).

   Class IIIA liquids shall include those having *flash points* at or above 140°F (60°C) and below 200°F (93°C).

   Class IIIB liquids shall include those liquids having *flash points* at or above 200°F (93°C).

E102.1.4 Flammable solids. Examples include:

1. Organic solids: camphor, cellulose nitrate, naphthalene.
2. Inorganic solids: decaborane, lithium amide, phosphorous heptasulfide, phosphorous sesquisulfide, potassium sulfide, anhydrous sodium sulfide, sulfur.
3. Combustible metals (except dusts and powders): cesium, magnesium, zirconium.

E102.1.5 Combustible dusts and powders. Finely divided solids that could be dispersed in air as a dust cloud: wood sawdust, plastics, coal, flour, powdered metals (few exceptions).

E102.1.6 Combustible fibers. See Section 5202.1.

E102.1.7 Oxidizers. Examples include:

1. Gases: oxygen, ozone, oxides of nitrogen, fluorine and chlorine (reaction with flammables is similar to that of oxygen).
2. Liquids: bromine, hydrogen peroxide, nitric acid, perchloric acid, sulfuric acid.
3. Solids: chlorates, chromates, chromic acid, iodine, nitrates, nitrites, perchlorates, peroxides.

E102.1.7.1 Examples of liquid and solid oxidizers according to hazard.

Class 4: ammonium perchlorate (particle size greater than 15 microns), ammonium permanganate, guanidine nitrate, hydrogen peroxide solutions more than 91 percent by weight, perchloric acid solutions more than 72.5 percent by weight, potassium superoxide, tetranitromethane.

Class 3: ammonium dichromate, calcium hypochlorite (over 50 percent by weight), chloric acid (10 percent maximum concentration), hydrogen peroxide solutions (greater than 52 percent up to 91 percent), mono-(trichloro)-tetra-(monopotassium di-

chloro)-penta-s-triazinetrione, nitric acid, (fuming - more than 86 percent concentration), perchloric acid solutions (60 percent to 72 percent by weight), potassium bromate, potassium chlorate, potassium dichloro-s-triazinetrione (potassium dichloro-isocyanurate), potassium perchlorate (99 percent), potassium permanganate (greater than 97.5 percent), sodium bromate, sodium chlorate, sodium chlorite (over 40 percent by weight) and sodium dichloro-s-triazinetrione anhydrous (sodium dichloro-isocyanurate anhydrous).

Class 2: barium bromate, barium chlorate, barium hypochlorite, barium perchlorate, barium permanganate, 1-bromo-3-chloro-5, 5-dimethylhydantoin, calcium chlorate, calcium chlorite, calcium hypochlorite (50 percent or less by weight), calcium perchlorate, calcium permanganate, calcium peroxide (75 percent), chromium trioxide (chromic acid), copper chlorate, halane (1, 3-di-chloro-5, 5-dimethylhydantoin), hydrogen peroxide (greater than 27.5 percent up to 52 percent), lead perchlorate, lithium chlorate, lithium hypochlorite (more than 39 percent available chlorine), lithium perchlorate, magnesium bromate, magnesium chlorate, magnesium perchlorate, mercurous chlorate, nitric acid (more than 40 percent but less than 86 percent), perchloric acid solutions (more than 50 percent but less than 60 percent), potassium peroxide, potassium superoxide, silver peroxide, sodium chlorite (40 percent or less by weight), sodium perchlorate, sodium perchlorate monohydrate, sodium permanganate, sodium peroxide, sodium persulfate (99 percent), strontium chlorate, strontium perchlorate, thallium chlorate, urea hydrogen peroxide, zinc bromate, zinc chlorate and zinc permanganate.

Class 1: all inorganic nitrates (unless otherwise classified), all inorganic nitrites (unless otherwise classified), ammonium persulfate, barium peroxide, hydrogen peroxide solutions (greater than 8 percent up to 27.5 percent), lead dioxide, lithium hypochlorite (39 percent or less available chlorine), lithium peroxide, magnesium peroxide, manganese dioxide, nitric acid (40 percent concentration or less), perchloric acid solutions (less than 50 percent by weight), potassium dichromate, potassium monopersulfate (45 percent $KHSO_5$ or 90 percent triple salt), potassium percarbonate, potassium persulfate, sodium carbonate peroxide, sodium dichloro-s-triazinetrione dihydrate, sodium dichromate, sodium perborate (anhydrous), sodium perborate monohydrate, sodium perborate tetra-hydrate, sodium percarbonate, strontium peroxide, trichloro-s-triazinetrione (trichloroisocyanuric acid) and zinc peroxide.

E102.1.8 Organic peroxides. Organic peroxides contain the double oxygen or peroxy (-o-o) group. Some are flammable compounds and subject to explosive decomposition. They are available as:

1. Liquids.
2. Pastes.
3. Solids (usually finely divided powders).

E102.1.8.1 Classification of organic peroxides according to hazard.

Unclassified: Unclassified organic peroxides are capable of *detonation* and are regulated in accordance with Chapter 56 of the *International Fire Code.*

Class I: acetyl cyclohexane sulfonyl 60-65 percent concentration by weight, fulfonyl peroxide, benzoyl peroxide over 98 percent concentration, t-butyl hydroperoxide 90 percent, t-butyl peroxyacetate 75 percent, t-butyl peroxyisopropylcarbonate 92 percent, diisopropyl peroxydicarbonate 100 percent, di-n-propyl peroxydicarbonate 98 percent, and di-n-propyl peroxydicarbonate 85 percent.

Class II: acetyl peroxide 25 percent, t-butyl hydroperoxide 70 percent (with DTBP and t-BuOH diluents), t-butyl peroxybenzoate 98 percent, t-butyl peroxy-2-ethylhexanoate 97 percent, t-butyl peroxyisobutyrate 75 percent, t-butyl peroxyisopropyl-carbonate 75 percent, t-butyl peroxypivalate 75 percent, dybenzoyl peroxydicarbonate 85 percent, di-sec-butyl peroxydicarbonate 98 percent, di-sec-butyl peroxydicarbonate 75 percent, 1,1-di-(t-butylperoxy)-3,5,5-trimethyecyclohexane 95 percent, di-(2-ethythexyl) peroxydicarbonate 97 percent, 2,5-dymethyl-2-5 di (benzoylperoxy) hexane 92 percent, and peroxyacetic acid 43 percent.

Class III: acetyl cyclohexane sulfonal peroxide 29 percent, benzoyl peroxide 78 percent, benzoyl peroxide paste 55 percent, benzoyl peroxide paste 50 percent peroxide/50 percent butylbenzylphthalate diluent, cumene hydroperoxide 86 percent, di-(4-butylcyclohexyl) peroxydicarbonate 98 percent, t-butyl peroxy-2-ethylhexanoate 97 percent, t-butyl peroxyneodecanoate 75 percent, decanoyl peroxide 98.5 percent, di-t-butyl peroxide 99 percent, 1,1-di-(t-butylperoxy)3,5,5-trimethylcyclohexane 75 percent, 2,4-dichlorobenzoyl peroxide 50 percent, di-isopropyl peroxydicarbonate 30 percent, 2,-5-di-methyl-2,5-di-(2-ethylhexanolyperoxy)-hexane 90 percent, 2,5-dimethyl-2,5-di-(t-butylperoxy) hexane 90 percent and methyl ethyl ketone peroxide 9 percent active oxygen diluted in dimethyl phthalate.

Class IV: benzoyl peroxide 70 percent, benzoyl peroxide paste 50 percent peroxide/15 percent water/35 percent butylphthalate diluent, benzoyl peroxide slurry 40 percent, benzoyl peroxide powder 35 percent, t-butyl hydroperoxide 70 percent, (with water diluent), t-butyl peroxy-2-ethylhexanoate 50 percent, decumyl peroxide 98 percent, di-(2-ethylhexal) peroxydicarbonate 40 percent, laurel peroxide 98 percent, p-methane hydroperoxide 52.5 percent, methyl ethyl ketone peroxide 5.5 percent active oxygen and methyl ethyl ketone peroxide 9 percent active oxygen diluted in water and glycols.

Class V: benzoyl peroxide 35 percent, 1,1-di-t-butyl peroxy 3,5,5-trimethylcyclohexane 40 percent, 2,5-di-(t-butyl peroxy) hexane 47 percent and 2,4-pentanedione peroxide 4 percent active oxygen.

E102.1.9 Pyrophoric materials. Examples include:

1. Gases: diborane, phosphine, silane.
2. Liquids: diethylaluminum chloride, di-ethylberyllium, diethylphosphine, diethylzinc, dimethylarsine, triethylaluminum etherate, tri-ethylbismuthine, triethylboron, trimethylaluminum, trimethylgallium.
3. Solids: cesium, hafnium, lithium, white or yellow phosphorous, plutonium, potassium, rubidium, sodium, thorium.

E102.1.10 Unstable (reactive) materials. Examples include:

Class 4: acetyl peroxide, dibutyl peroxide, dinitrobenzene, ethyl nitrate, peroxyacetic acid and picric acid (dry) trinitrobenzene.

Class 3: hydrogen peroxide (greater than 52 percent), hydroxylamine, nitromethane, paranitroaniline, perchloric acid and tetrafluoroethylene monomer.

Class 2: acrolein, acrylic acid, hydrazine, methacrylic acid, sodium perchlorate, styrene and vinyl acetate.

Class 1: acetic acid, hydrogen peroxide 35 percent to 52 percent, paraldehyde and tetrahydrofuran.

E102.1.11 Water-reactive materials. Examples include:

Class 3: aluminum alkyls such as triethylaluminum, isobutylaluminum and trimethylaluminum; bromine pentafluoride, bromine trifluoride, chlorodiethylaluminium and diethylzinc.

Class 2: calcium carbide, calcium metal, cyanogen bromide, lithium hydride, methyldichlorosilane, potassium metal, potassium peroxide, sodium metal, sodium peroxide, sulfuric acid and trichlorosilane.

Class 1: acetic anhydride, sodium hydroxide, sulfur monochloride and titanium tetrachloride.

E102.1.12 Cryogenic fluids. The cryogenics listed will exist as *compressed gases* where they are stored at ambient temperatures.

1. Flammable: carbon monoxide, deuterium (heavy hydrogen), ethylene, hydrogen, methane.
2. Oxidizing: fluorine, nitric oxide, oxygen.
3. *Corrosive*: fluorine, nitric oxide.
4. Inert (chemically unreactive): argon, helium, krypton, neon, nitrogen, xenon.
5. Highly toxic: fluorine, nitric oxide.

E102.2 Health hazards. Materials classified in this section pose a *health hazard*.

E102.2.1 Highly toxic materials. Examples include:

1. Gases: arsine, cyanogen, diborane, fluorine, germane, hydrogen cyanide, nitric oxide, nitrogen dioxide, ozone, phosphine, hydrogen selenide, stibine.
2. Liquids: acrolein, acrylic acid, 2-chloroethanol (ethylene chlorohydrin), hydrazine, hydrocyanic acid, 2-methylaziridine (propylenimine), 2-methyl-acetonitrile (acetone cyanohydrin), methyl ester isocyanic acid (methyl isocyanate), nicotine, tetranitromethane and tetraethylstannane (tetraethyltin).
3. Solids: (aceto) phenylmercury (phenyl mercuric acetate), 4-aminopyridine, arsenic pentoxide, arsenic trioxide, calcium cyanide, 2-chloroacetophenone, aflatoxin B, decaborane(14), mercury (II) bromide (mercuric bromide), mercury (II) chloride (*corrosive* mercury chloride), pentachlorophenol, methyl parathion, phosphorus (white) and sodium azide.

E102.2.2 Toxic materials. Examples include:

1. Gases: boron trichloride, boron trifluoride, chlorine, chlorine trifluoride, hydrogen fluoride, hydrogen sulfide, phosgene, silicon tetrafluoride.
2. Liquids: acrylonitrile, allyl alcohol, alpha-chlorotoluene, aniline, 1-chloro-2,3-epoxypropane, chloroformic acid (allyl ester), 3-chloropropene (allyl chloride), o-cresol, crotonaldehyde, dibromomethane, diisopropylamine, diethyl ester sulfuric acid, dimethyl ester sulfuric acid, 2-furaldehyde (furfural), furfural alcohol, phosphorus chloride, phosphoryl chloride (phosphorus oxychloride) and thionyl chloride.
3. Solids: acrylamide, barium chloride, barium (II) nitrate, benzidine, p-benzoquinone, beryllium chloride, cadmium chloride, cadmium oxide, chloroacetic acid, chlorophenylmercury (phenyl mercuric chloride), chromium (VI) oxide (chromic acid, solid), 2,4-dinitrotoluene, hydroquinone, mercury chloride (calomel), mercury (II) sulfate (mercuric sulfate), osmium tetroxide, oxalic acid, phenol, P-phenylenediamine, phenylhydrazine, 4-phenylmorpholine, phosphorus sulfide, potassium fluoride, potassium hydroxide, selenium (IV) disulfide and sodium fluoride.

E102.2.3 Corrosives. Examples include:

1. Acids: Examples: chromic, formic, hydrochloric (muriatic) greater than 15 percent, hydrofluoric, nitric (greater than 6 percent, perchloric, sulfuric (4 percent or more).
2. Bases (alkalis): hydroxides-ammonium (greater than 10 percent), calcium, potassium (greater than 1 percent), sodium (greater than 1 percent); certain carbonates-potassium.
3. Other *corrosives*: bromine, chlorine, fluorine, iodine, ammonia.

Note: *Corrosives* that are oxidizers, e.g., nitric acid, chlorine, fluorine; or are *compressed gases*, e.g., ammonia, chlorine, fluorine; or are water-reactive, e.g., concentrated sulfuric acid, sodium hydroxide, are *physical hazards* in addition to being *health hazards*.

SECTION E103
EVALUATION OF HAZARDS

E103.1 Degree of hazard. The degree of hazard present depends on many variables that should be considered individually and in combination. Some of these variables are as shown in Sections E103.1.1 through E103.1.5.

E103.1.1 Chemical properties of the material. Chemical properties of the material determine self reactions and reactions that could occur with other materials. Generally, materials within subdivisions of hazard categories will exhibit similar chemical properties. However, materials with similar chemical properties could pose very different hazards. Each individual material should be researched to determine its hazardous properties and then considered in relation to other materials that it might contact and the surrounding environment.

E103.1.2 Physical properties of the material. Physical properties, such as whether a material is a solid, liquid or gas at ordinary temperatures and pressures, considered along with chemical properties will determine requirements for containment of the material. Specific gravity (weight of a liquid compared to water) and vapor density (weight of a gas compared to air) are both physical properties that are important in evaluating the hazards of a material.

E103.1.3 Amount and concentration of the material. The amount of material present and its concentration must be considered along with physical and chemical properties to determine the magnitude of the hazard. Hydrogen peroxide, for example, is used as an antiseptic and a hair bleach in low concentrations (approximately 8 percent in water solution). Over 8 percent, hydrogen peroxide is classed as an oxidizer and is toxic. Above 90 percent, it is a Class 4 oxidizer "that can undergo an explosive reaction when catalyzed or exposed to heat, shock or friction," a definition that incidentally also places hydrogen peroxide over 90-percent concentration in the unstable (reactive) category. Small amounts at high concentrations could present a greater hazard than large amounts at low concentrations.

E103.1.3.1 Mixtures. Gases—toxic and highly toxic gases include those gases that have an LC_{50} of 2,000 parts per million (ppm) or less when rats are exposed for a period of 1 hour or less. To maintain consistency with the definitions for these materials, exposure data for periods other than 1 hour must be normalized to 1 hour. To classify mixtures of *compressed gases* that contain one or more toxic or highly toxic components, the LC_{50} of the mixture must be determined. Mixtures that contain only two components are binary mixtures. Those that contain more than two components are multicomponent mixtures. Where two or more hazardous substances (components) having an LC_{50} below 2,000 ppm are present in a mixture, their combined effect, rather than that of the individual substance components, must be considered. In the absence of information to the contrary, the effects of the hazards present must be considered as additive. Exceptions to the above rule could be made when there is a good reason to believe that the principal effects of the different harmful substances (components) are not additive.

For binary mixtures where the hazardous component is diluted with a nontoxic gas such as an inert gas, the LC_{50} of the mixture is estimated by use of the methodology contained in CGA P-20. The hazard zones specified in CGA P-20 are applicable for DOTn purposes and shall not be used for hazard classification.

E103.1.4 Actual use, activity or process involving the material. The definition of handling, storage and use in *closed systems* refers to materials in packages or containers. Dispensing and use in open containers or systems describes situations where a material is exposed to ambient conditions or vapors are liberated to the atmosphere. Dispensing and use in *open systems*, then, are generally more hazardous situations than handling, storage or use in *closed systems*. The actual use or process could include heating, electric or other sparks, catalytic or reactive materials and many other factors that could affect the hazard and must therefore be thoroughly analyzed.

E103.1.5 Surrounding conditions. Conditions such as other materials or processes in the area, type of construction of the structure, fire protection features (e.g., *fire walls*, sprinkler systems, alarms, etc.), occupancy (use) of adjoining areas, normal temperatures, exposure to weather, etc., must be taken into account in evaluating the hazard.

E103.2 Evaluation questions. The following are sample evaluation questions:

1. What is the material? Correct identification is important; exact spelling is vital. Check labels, MSDS, ask responsible persons, etc.
2. What are the concentration and strength?
3. What is the physical form of the material? Liquids, gases and finely divided solids have differing requirements for spill and leak control and containment.
4. How much material is present? Consider in relation to permit amounts, *maximum allowable quantity per control area* (from Group H occupancy requirements), amounts that require detached storage and overall magnitude of the hazard.
5. What other materials (including furniture, equipment and building components) are close enough to interact with the material?
6. What are the likely reactions?
7. What is the activity involving the material?
8. How does the activity impact the hazardous characteristics of the material? Consider vapors released or hazards otherwise exposed.
9. What must the material be protected from? Consider other materials, temperature, shock, pressure, etc.
10. What effects of the material must people and the environment be protected from?
11. How can protection be accomplished? Consider:

    11.1. Proper containers and equipment.

11.2. Separation by distance or construction.

11.3. Enclosure in cabinets or rooms.

11.4. Spill control, drainage and containment.

11.5. Control systems-ventilation, special electrical, detection and alarm, extinguishment, explosion venting, limit controls, exhaust scrubbers and excess flow control.

11.6. Administrative (operational) controls-signs, ignition source control, security, personnel training, established procedures, storage plans and emergency plans.

Evaluation of the hazard is a strongly subjective process; therefore, the person charged with this responsibility must gather as much relevant data as possible so that the decision will be objective and within the limits prescribed in laws, policies and standards.

It could be necessary to cause the responsible persons in charge to have tests made by qualified persons or testing laboratories to support contentions that a particular material or process is or is not hazardous. See Section 104.7.2 of the *International Fire Code*.

SECTION E104
REFERENCED STANDARDS

CGA (2009)	P-20—	Standard for Classification of Toxic Mixtures	E103.1.3.1
CGA (2008)	P-23—	Standard for Categorizing Gas Mixtures Containing Flammable and Nonflammable Components	E102.1.2
ICC	IFC—15	International Fire Code	E101.1, E102.1.1, E102.1.8.1, E103.2

APPENDIX F

HAZARD RANKING

The provisions contained in this appendix are not mandatory unless specifically referenced in the adopting ordinance.

SECTION F101
GENERAL

F101.1 Scope. Assignment of levels of hazards to be applied to specific hazard classes as required by NFPA 704 shall be in accordance with this appendix. The appendix is based on application of the degrees of hazard as defined in NFPA 704 arranged by hazard class as for specific categories defined in Chapter 2 of the *International Fire Code* and used throughout.

F101.2 General. The hazard rankings shown in Table F101.2 have been established by using guidelines found within NFPA 704. As noted in Section 4.2 of NFPA 704, there could be specific reasons to alter the degree of hazard assigned to a specific material; for example, ignition temperature, flammable range or susceptibility of a container to rupture by an internal combustion explosion or to metal failure while under pressure or because of heat from external fire. As a result, the degree of hazard assigned for the same material can vary when assessed by different people of equal competence.

The hazard rankings assigned to each class represent reasonable minimum hazard levels for a given class based on the use of criteria established by NFPA 704. Specific cases of use or storage may dictate the use of higher degrees of hazard in certain cases.

SECTION F102
REFERENCED STANDARDS

ICC	IFC—15	International Fire Code	F101.1
NFPA	704—12	Identification of the Hazards of Materials for Emergency Response	F101.1, F101.2

TABLE F101.2
FIRE FIGHTER WARNING PLACARD DESIGNATIONS BASED ON HAZARD CLASSIFICATION CATEGORIES

HAZARD CATEGORY	DESIGNATION
Combustible liquid II	F2
Combustible liquid IIIA	F2
Combustible liquid IIIB	F1
Combustible dust	F4
Combustible fiber	F3
Cryogenic flammable	F4, H3
Cryogenic oxidizing	OX, H3
Explosive	R4
Flammable solid	F2
Flammable gas (gaseous)	F4
Flammable gas (liquefied)	F4
Flammable liquid IA	F4
Flammable liquid IB	F3
Flammable liquid IC	F3
Organic peroxide, UD	R4
Organic peroxide I	F4, R3
Organic peroxide II	F3, R3
Organic peroxide III	F2, R2
Organic peroxide IV	F1, R1
Organic peroxide V	None
Oxidizing gas (gaseous)	OX
Oxidizing gas (liquefied)	OX
Oxidizer 4	OX4
Oxidizer 3	OX3
Oxidizer 2	OX2
Oxidizer 1	OX1
Pyrophoric gases	F4
Pyrophoric solids, liquids	F3
Unstable reactive 4D	R4
Unstable reactive 3D	R4
Unstable reactive 3N	R2
Unstable reactive 2	R2
Unstable reactive 1	None
Water reactive 3	W3
Water reactive 2	W2
Corrosive	H3, COR
Toxic	H3
Highly toxic	H4

F—Flammable category.
R—Reactive category.
H—Health category.
W—Special hazard: water reactive.
OX—Special hazard: oxidizing properties.
COR—Corrosive.
UD—Unclassified detonable material.
4D—Class 4 detonable material.
3D—Class 3 detonable material.
3N—Class 3 nondetonable material.

APPENDIX G

CRYOGENIC FLUIDS—WEIGHT AND VOLUME EQUIVALENTS

This appendix is for information purposes and is not intended for adoption.

SECTION G101
GENERAL

G101.1 Scope. This appendix is used to convert from liquid to gas for *cryogenic fluids*.

G101.2 Conversion. Table G101.2 shall be used to determine the equivalent amounts of *cryogenic fluids* in either the liquid or gas phase.

G101.2.1 Use of the table. To use Table G101.2, read horizontally across the line of interest. For example, to determine the number of cubic feet of gas contained in 1.0 gallon (3.785 L) of liquid argon, find 1.000 in the column entitled "Volume of Liquid at Normal *Boiling Point*." Reading across the line under the column entitled "Volume of Gas at NTP" (70°F and 1 atmosphere/14.7 psia), the value of 112.45 cubic feet (3.184 m^3) is found.

G101.2.2 Other quantities. If other quantities are of interest, the numbers obtained can be multiplied or divided to obtain the quantity of interest. For example, to determine the number of cubic feet of argon gas contained in a volume of 1,000 gallons (3785 L) of liquid argon at its normal *boiling point*, multiply 112.45 by 1,000 to obtain 112,450 cubic feet (3184 m^3).

TABLE G101.2
WEIGHT AND VOLUME EQUIVALENTS FOR COMMON CRYOGENIC FLUIDS

CRYOGENIC FLUID	WEIGHT OF LIQUID OR GAS		VOLUME OF LIQUID AT NORMAL BOILING POINT		VOLUME OF GAS AT NTP	
	Pounds	Kilograms	Liters	Gallons	Cubic feet	Cubic meters
Argon	1.000	0.454	0.326	0.086	9.67	0.274
	2.205	1.000	0.718	0.190	21.32	0.604
	3.072	1.393	1.000	0.264	29.71	0.841
	11.628	5.274	3.785	1.000	112.45	3.184
	10.340	4.690	3.366	0.889	100.00	2.832
	3.652	1.656	1.189	0.314	35.31	1.000
Helium	1.000	0.454	3.631	0.959	96.72	2.739
	2.205	1.000	8.006	2.115	213.23	6.038
	0.275	0.125	1.000	0.264	26.63	0.754
	1.042	0.473	3.785	1.000	100.82	2.855
	1.034	0.469	3.754	0.992	100.00	2.832
	0.365	0.166	1.326	0.350	35.31	1.000
Hydrogen	1.000	0.454	6.409	1.693	191.96	5.436
	2.205	1.000	14.130	3.733	423.20	11.984
	0.156	0.071	1.000	0.264	29.95	0.848
	0.591	0.268	3.785	1.000	113.37	3.210
	0.521	0.236	3.339	0.882	100.00	2.832
	0.184	0.083	1.179	0.311	35.31	1.000
Oxygen	1.000	0.454	0.397	0.105	12.00	0.342
	2.205	1.000	0.876	0.231	26.62	0.754
	2.517	1.142	1.000	0.264	30.39	0.861
	9.527	4.321	3.785	1.000	115.05	3.250
	8.281	3.756	3.290	0.869	100.00	2.832
	2.924	1.327	1.162	0.307	35.31	1.000
Nitrogen	1.000	0.454	0.561	0.148	13.80	0.391
	2.205	1.000	1.237	0.327	30.43	0.862
	1.782	0.808	1.000	0.264	24.60	0.697
	6.746	3.060	3.785	1.000	93.11	2.637
	7.245	3.286	4.065	1.074	100.00	2.832
	2.558	1.160	1.436	0.379	35.31	1.000
LNG[a]	1.000	0.454	1.052	0.278	22.968	0.650
	2.205	1.000	2.320	0.613	50.646	1.434
	0.951	0.431	1.000	0.264	21.812	0.618
	3.600	1.633	3.785	1.000	82.62	2.340
	4.356	1.976	4.580	1.210	100.00	2.832
	11.501	5.217	1.616	0.427	35.31	1.000

For SI: 1 pound = 0.454 kg, 1 gallon = 3.785 L, 1 cubic foot = 0.02832 m^3, °C = [(°F)-32]/1.8, 1 pound per square inch atmosphere = 6.895 kPa.

a. The values listed for liquefied natural gas (LNG) are "typical" values. LNG is a mixture of hydrocarbon gases, and no two LNG streams have exactly the same composition.

APPENDIX H

HAZARDOUS MATERIALS MANAGEMENT PLAN (HMMP) AND HAZARDOUS MATERIALS INVENTORY STATEMENT (HMIS) INSTRUCTIONS

The provisions contained in this appendix are adopted as part of this code.

SECTION H101
HMMP

H101.1 Part A (See Example Format in Figure 1).

1. Fill out items and sign the declaration.
2. Part A of this section is required to be updated and submitted annually, or within 30 days of a process or management change.

H101.2 Part B–General Facility Description/Site Plan (See Example Format in Figure 2).

1. Provide a site plan on $8^1/_2$ by 11 inch (215 mm by 279 mm) paper, showing the locations of all buildings, structures, outdoor chemical control or storage and use areas, parking lots, internal roads, storm and sanitary sewers, wells and adjacent property uses. Indicate the approximate scale, northern direction and date the drawing was completed.

H101.3 Part C–Facility Storage Map–Confidential Information (See Example Format in Figure 3).

1. Provide a floor plan of each building identified on the site plan as containing hazardous materials on $8^1/_2$-inch by 11-inch (215 mm by 279 mm) paper, identifying the northern direction, and showing the location of each storage and use area.
2. Identify storage and use areas, including hazard waste storage areas.
3. Show the following:
   - 3.1. Accesses to each storage and use area.
   - 3.2. Location of emergency equipment.
   - 3.3. Location where liaison will meet emergency responders.
   - 3.4. Facility evacuation meeting point locations.
   - 3.5. The general purpose of other areas within the building.
   - 3.6. Location of all aboveground and underground tanks to include sumps, vaults, below-grade treatment systems, piping, etc.
   - 3.7. Show hazard classes in each area.
   - 3.8. Show locations of all Group H occupancies, control areas, and exterior storage and use areas.
   - 3.9. Show emergency exits.

SECTION H102
HMIS

H102.1 Inventory statement contents.

1. HMIS Summary Report (see Example Format in Figure 4).
   - 1.1. Complete a summary report for each control area and Group H occupancy.
   - 1.2. The storage summary report includes the HMIS Inventory Report amounts in storage, use-closed and use-open conditions.
   - 1.3. Provide separate summary reports for storage, use-closed and use-open conditions.
   - 1.4. IBC/IFC Hazard Class.
   - 1.5. Inventory Amount. [Solid (lb), Liquid (gal), Gas (cu ft, gal or lbs)].
   - 1.6. IBC/IFC Maximum Allowable Quantity per control area (MAQ). (If applicable, double MAQ for sprinkler protection and/or storage in cabinets. For wholesale and retail sales occupancies, go to Tables 5003.11.1 and 5704.3.4.1 of the *International Fire Code* for MAQs.).
2. HMIS Inventory Report (see Example Format in Figure 5).
   - 2.1. Complete an inventory report by listing products by location.
   - 2.2. Product Name.
   - 2.3. Components. (For mixtures specify percentages of major components if available.)
   - 2.4. Chemical Abstract Service (CAS) Number. (For mixtures list CAS Numbers of major components if available.)
   - 2.5. Location. (Identify the control area or, if it is a Group H occupancy, provide the classification, such as H-2, H-3, etc.)
   - 2.6. Container with a capacity of greater than 55 gallons (208 L). (If product container, vessel or tank could exceed 55 gallons, indicate yes in column.)
   - 2.7. Hazard Classification. (List applicable classifications for each product.)
   - 2.8. Stored. (Amount of product in storage conditions.)

2.9. Closed. (Amount of product in use-closed systems.)

2.10. Open. (Amount of product in use-open systems.)

Facilities that have prepared, filed and submitted a Tier II Inventory Report required by the U.S. Environmental Protection Agency (USEPA) or required by a state that has secured USEPA approval for a similar form shall be deemed to have complied with this section.

SECTION H103
EMERGENCY PLAN

1. Emergency Notification. (See Example Format in Figure 6.)
2. Where OSHA or state regulations require a facility to have either an Emergency Action Plan (EAP) or an Emergency Response Plan (ERP), the EAP or ERP shall be included as part of the HMMP.

SECTION H104
REFERENCED STANDARDS

ICC	IBC—15	International Building Code	H102.1
ICC	IFC—15	International Fire Code	H102.1

FIGURE 1
HAZARDOUS MATERIALS MANAGEMENT PLAN
SECTION I: FACILITY DESCRIPTION

1. Business Name: _____ Phone: _____
   Address: _____

2. Person Responsible for the Business
   Name: _____ Title: _____ Phone: _____

3. Emergency Contacts:

Name:	Title:	Home Number:	Work Number:

4. Person Responsible for the Application/Principal Contact:
   Name: _____ Title: _____ Phone: _____

5. Principal Business Activity:
   _____
   _____
   _____

6. Number of Employees: _____

7. Number of Shifts: _____
   a. Number of Employees per Shift:
   _____
   _____
   _____

B. Hours of Operation: _____

FIGURE 2
HAZARDOUS MATERIALS MANAGEMENT PLAN SECTION I: FACILITY DESCRIPTION

FIGURE 3
HAZARDOUS MATERIALS MANAGEMENT PLAN SECTION I: FACILITY DESCRIPTION PART C—FACILITY MAP

Business Name	Date
Address	Page of

FIGURE 4
SECTION II—HAZARDOUS MATERIALS INVENTORY STATEMENT (HMIS) HMIS SUMMARY REPORT[a] (Storage[b] Conditions)[c]

IBC/IFC HAZARD CLASS	HAZARD CLASS	INVENTORY AMOUNT			IBC/IFC MAXIMUM ALLOWABLE QUANTITY[d]		
	(Abbrev)	Solid (lb)	Liquid (gal)	Gas (cu ft, gal, lb)	Solid (lb)	Liquid (gal)	Gas (cu ft, gal, lb)
Combustible Liquid	C2		5			120	
	C3A					330	
	C3B		6			13,200	
Combustible Fiber	Loose/Baled						
Cryogenics, Flammable	Cryo-Flam					45	
Cryogenic, Oxidizing	Cryo-OX					45	
Flammable Gas	FLG						
(Gaseous)				150			1,000
(Liquefied)						30	
Flammable Liquid	F1A					30	
	F1B & F1C		5			120	
Combination (1A, 1B, 1C)			5			120	
Flammable Solid	FLS				125		
Organic Peroxide	OPU				0		
	OP1				5		
	OP2				50		
	OP3				125		
	OP4				NL		
	OP5				NL		
Oxidizer	OX4				0		
	OX3				10		
	OX2				250		
	OX1				4,000		

a. Complete a summary report for each control area and Group H occupancy.
b. Storage = storage + use-closed + use-open systems.
c. Separate reports are required for use-closed and use-open systems.
d. Include increases for sprinklefrs or storage in cabinets, if applicable.
(This is an example; add additional hazard classes as needed.)

FIGURE 5
SECTION II — HAZARDOUS MATERIALS INVENTORY STATEMENT (HMIS) HMIS INVENTORY REPORT
(Sort Products Alphabetically by Location of Product and then Alphabetically by Product Name)

Product Name (Components)[c]	CAS Number	Location[a]	Container > 55 gal[b]	Haz Class 1	Haz Class 2	Haz Class 3	Stored (lbs)	Stored (gal)	Stored (gas)[d]	Closed (lbs)	Closed (gal)	Closed gas[d]	Open (lbs)	Open (gal)
ACETYLENE (Acetylene gas)	74-86-2	Control Area 1		FLG	UR2				150					
BLACK AEROSOL SPRAY PAINT (Mixture)	Mixture	Control Area 1		A-L3			24							
GASOLINE, UNLEADED (Gasoline-Mixture) Methyl-t-Butyl-Ether-15% Diisopropyl Ether-7% Ethanol-11% Toluene-12% Xylene-11%	8006-61-9 1634-04-4 108-20-3 64-17-5 108-88-3 1330-20-7	Control Area 1		FIB				5						
MOTOR OIL-10W40 (Hydrotreated Heavy Paraffinic Distillate-85%; Additives-20%)	64742-54-7 Mixture	Control Area 1		C3B				3						
DIESEL (Diesel-99-100%; Additives)	68476-34-6 Proprietary	Control Area 2	Yes	C2				225						
TRANSMISSION FLUID (Oil-Solvent-Neutral; Performance Additives)	64742-65-0	Control Area 2		C3B				3						
OXYGEN, GAS (Oxygen)	7782-44-7	H-3		OXG					5,000					

a. Identify the control area or, if it is a Group H occupancy, provide the classification, such as H-2, H-3, etc.
b. If the product container, vessel or tank could exceed 55 gallons, indicate yes in the column.
c. Specify percentages of main components if available.
d. In cubic feet, gallons or pounds.
(This is an example; add additional hazard classes as needed.)

FIGURE 6
HAZARDOUS MATERIALS MANAGEMENT PLAN
SECTION III: EMERGENCY PLAN

1. In the event of an emergency, the following shall be notified:
   a. Facility Liaison

Name	Title	Home Number	Work Number

b. Agency

Agency	Contact	Phone Number
Fire Department		
LEPC		
Other		

APPENDIX I

FIRE PROTECTION SYSTEMS—NONCOMPLIANT CONDITIONS

Deleted.

APPENDIX J

BUILDING INFORMATION SIGN

The provisions contained in this appendix are not mandatory unless specifically referenced in the adopting ordinance.

SECTION J101
GENERAL

J101.1 Scope. New buildings shall have a building information sign(s) that shall comply with Sections J101.1.1 through J101.7. Existing buildings shall be brought into conformance with Sections J101.1 through J101.9 when one of the following occurs:

1. The fire department conducts an annual inspection intended to verify compliance with this section, or any required inspection.
2. When a change in use or occupancy has occurred.

   Exceptions:

   1. Group U occupancies.
   2. One- and two-family dwellings.

J101.1.1 Sign location. The building information sign shall be placed at one of the following locations:

1. Upon the entry door or sidelight at a minimum height of 42 inches (1067 mm) above the walking surface on the address side of the building or structure.
2. Upon the exterior surface of the building or structure on either side of the entry door, not more than 3 feet (76 mm) from the entrance door, at a minimum height of 42 inches (1067 mm) above the walking surface on the address side of the building or structure.
3. Conspicuously placed inside an enclosed entrance lobby, on any vertical surface within 10 feet (254 mm) of the entrance door at a minimum height of 42 inches (1067 mm) above the walking surface.
4. Inside the building's fire command center.
5. On the exterior of the fire alarm control unit or on the wall immediately adjacent to the fire alarm control unit door where the alarm panel is located in the enclosed main lobby.

J101.1.2 Sign features. The building information sign shall consist of all of the following:

1. White reflective background with red letters.
2. Durable material.
3. Numerals shall be Roman or Latin numerals, as required, or alphabet letters.
4. Permanently affixed to the building or structure in an approved manner.

J101.1.3 Sign shape. The building information sign shall be a Maltese cross as shown in Figure J101.1.3.

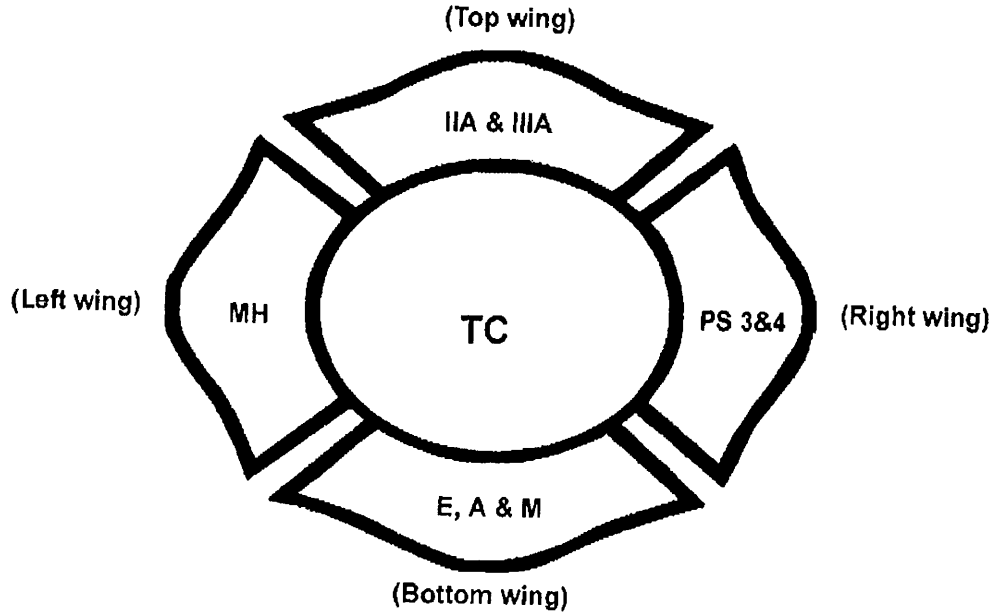

FIGURE J101.1.3
EXAMPLE OF COMPLETED BUILDING INFORMATION SIGN

J101.1.4 Sign size and lettering. The minimum size of the building information sign and lettering shall be in accordance with the following:

1. The width and height shall be 6 inches by 6 inches (152 mm by 152 mm).
2. The height or width of each Maltese cross wing area shall be $1\frac{1}{8}$ inches (29 mm) and have a stroke width of $\frac{1}{2}$ inch (13 mm).
3. The center of the Maltese cross, a circle or oval, shall be 3 inches (76 mm) in diameter and have a stroke width of $\frac{1}{2}$ inch (6 mm).
4. All Roman numerals and alphabetic designations, shall be $1\frac{1}{4}$ inch (32 mm) height and have a stroke width of $\frac{1}{4}$ inch (6 mm).

J101.2 Sign designations. Designations shall be made based upon the construction type, content, hazard, *fire protection systems*, life safety and occupancy. Where multiple designations occur within a classification category, the designation used shall be based on the greatest potential risk.

J101.3 Construction type (top wing). The construction types shall be designated by assigning the appropriate Roman numeral, and letter, placed inside the top wing of the Maltese cross. The hourly rating provided is for the structural framing in accordance with Table 601 of the *International Building Code*,

CONSTRUCTION TYPE	FIRE-RESISTANCE RATING
IA—Noncombustible	3 Hours
IB—Noncombustible	2 Hours
IIA—Noncombustible	1 Hour
IIB—Noncombustible	0 Hours
IIIA—Noncombustible/combustible	1 Hour
IIIB—Noncombustible/combustible	0 Hours
IV—Heavy timber (HT)	HT
VA—Combustible	1 Hour
VB—Combustible	0 Hours

J101.4 Fire protection systems (right wing). The *fire protection system* shall be designated by determining its level of protection and assigning the appropriate designation to the right wing of the Maltese cross. Where multiple systems are provided, all shall be listed:

AS *Automatic sprinkler system* installed throughout

DS Dry sprinkler system and designated areas

FA Fire alarm system

FP Fire pump

FW *Fire wall* and designated areas

PAS Pre-action sprinkler system and designated floor

PS Partial *automatic sprinkler system*, and designate floor

CES Chemical extinguishing system and designated area

CS Combination sprinkler and standpipe system

S Standpipe system

NS No system installed

J101.5 Occupancy type (bottom wing). The occupancy of a building or structure shall be designated in accordance with the occupancy classification found in Section 302.1 of the *International Building Code* and the corresponding designation shall be placed in the bottom wing of the Maltese cross. Where a building or structure contains a mixture of uses and occupancies; all uses and occupancies shall be identified.

A Assembly

B Business

E Educational

F Factory or Industrial

H High Hazard

I Institutional

M Mercantile

R Residential

J101.6 Hazards of content (left wing). The hazards of building contents shall be designated by one of the following classifications as defined in NFPA 13 and the appropriate designation shall be placed inside the left wing of the Maltese cross:

LH Light hazard

MH Moderate hazard

HH High hazard

J101.7 Tactical considerations (center circle). The center circle shall include the name of the local fire service and when required the letters TC for tactical considerations. Where fire fighters conduct preplan operations, a unique situation(s) for tactical considerations shall be identified and the information provided to the fire dispatch communications center to further assist fire fighters in identifying that there is special consideration(s) for this occupancy. Special consideration designations include, but are not limited to:

1. Impact-resistant drywall.
2. Impact-resistant glazing, such as blast or hurricane-type glass.
3. All types of roof and floor structural members including but not limited to post-tension concrete, bar joists, solid wood joists, rafters, trusses, cold-formed galvanized steel, I-joists and I-beams; green roof with vegetation, soil and plants.
4. Hazardous materials (explosives, chemicals, plastics, etc.).
5. Solar panels and DC electrical energy.
6. HVAC system; and smoke management system for pressurization and exhaust methods.
7. Other unique characteristic(s) within the building that are ranked according to a potential risk to occupants and fire fighters.

J101.8 Sign classification maintenance, building information. Sign maintenance shall comply with each of the following:

1. Fire departments in the jurisdiction shall define the designations to be placed within the sign.
2. Fire departments in the jurisdiction shall conduct annual inspections to verify compliance with this section of the code and shall notify the *owner*, or the *owner's* agent, of any required updates to the sign in accordance with fire department designations and the *owner*, or the *owner's* agent, shall comply within 30 days.
3. The owner of a building shall be responsible for the maintenance and updates to the sign in accordance with fire department designations.

J101.9 Training. Jurisdictions shall train fire department personnel on Sections J101.1 through J101.9.

SECTION J102
REFERENCED STANDARDS

ICC	IBC—15	International Building Code	J101.3, J101.5
NFPA	13—13	Installation of Sprinkler Systems	J101.6

APPENDIX K

CONSTRUCTION REQUIREMENTS FOR EXISTING AMBULATORY CARE FACILITIES

Deleted.

APPENDIX L

REQUIREMENTS FOR FIRE FIGHTER AIR REPLENISHMENT SYSTEMS

The provisions contained in this appendix are not mandatory unless specifically referenced in the adopting ordinance.

SECTION L101 GENERAL

L101.1 Scope. Fire fighter air replenishment systems (FARS) shall be provided in accordance with this appendix. The adopting ordinance shall specify building characteristics or special hazards that establish thresholds triggering a requirement for the installation of a FARS. The requirement shall be based upon the fire department's capability of replenishing fire fighter breathing air during sustained emergency operations. Considerations shall include:

1. Building characteristics, such as number of stories above or below grade plane, floor area, type of construction and fire-resistance of the primary structural *frame* to allow sustained fire-fighting operations based on a rating of not less than 2 hours.
2. Special hazards, other than buildings, that require unique accommodations to allow the fire department to replenish fire fighter breathing air.
3. Fire department staffing level.
4. Availability of a fire department breathing air replenishment vehicle.

SECTION L102 DEFINITIONS

L102.1 Definitions. For the purpose of this appendix, certain terms are defined as follows:

FIRE FIGHTER AIR REPLENISHMENT SYSTEM (FARS). A permanently installed arrangement of piping, valves, fittings and equipment to facilitate the replenishment of breathing air in self contained breathing apparatus (SCBA) for fire fighters engaged in emergency operations.

SECTION L103 PERMITS

L103.1 Permits. Permits shall be required to install and maintain a FARS. Permits shall be in accordance with Sections L103.2 and L103.3.

L103.2 Construction permit. A construction permit is required for installation of or modification to a FARS. The construction permit application shall include documentation of an acceptance and testing plan as specified in Section L105.

L103.3 Operational permit. An operational permit is required to maintain a FARS.

SECTION L104 DESIGN AND INSTALLATION

L104.1 Design and installation. A FARS shall be designed and installed in accordance with Sections L104.2 through L104.15.

L104.2 Standards. Fire fighter air replenishment systems shall be in accordance with Sections L104.2.1 and L104.2.2.

L104.2.1 Pressurized system components. Pressurized system components shall be designed and installed in accordance with ASME B31.3.

L104.2.2 Air quality. The system shall be designed to convey breathing air complying with NFPA 1989.

L104.3 Design and operating pressure. The minimum design pressure shall be 110 percent of the fire department's normal SCBA fill pressure. The system design pressure shall be marked in an approved manner at the supply connections, and adjacent to pressure gauges on any fixed air supply components. Pressure shall be maintained in the system within 5 percent of the design pressure.

L104.4 Cylinder refill rate. The FARS shall be capable of refilling breathing air cylinders of a size and pressure used by the fire department at a rate of not less than two empty cylinders in 2 minutes.

L104.5 Breathing air supply. Where a fire department mobile air unit is available, the FARS shall be supplied by an external mobile air connection in accordance with Section L104.14. Where a fire department mobile air unit is not available, a stored pressure air supply shall be provided in accordance with Section L104.5.1. A stored pressure air supply shall be permitted to be added to a system supplied by an external mobile air connection provided that a means to bypass the stored pressure air supply is located at the external mobile air connection.

L104.5.1. Stored pressure air supply. A stored pressure air supply shall be designed based on Chapter 24 of NFPA 1901 except that provisions applicable only to mobile apparatus or not applicable to system design shall not apply. A stored pressure air supply shall be capable of refilling not less than 50 empty breathing air cylinders of a size and pressure used by the fire department.

L104.5.2. Retrofit of external mobile air connection. A FARS not initially provided with an external mobile air connection due to the lack of a mobile air unit shall be retrofitted with an external mobile air connection where a mobile air unit becomes available. Where an external mobile air connection is provided, a means to bypass the

stored pressure air supply shall be located at the external mobile air connection. The retrofit shall be completed not more than 12 months after notification by the *fire code official*.

L104.6 Isolation valves. System isolation valves that are accessible to the fire department shall be installed on the system riser to allow piping beyond any air cylinder refill panel to be blocked.

L104.7 Pressure relief valve. Pressure relief valves shall be installed at each point of supply and at the top or end of every riser. The relief valve shall meet the requirements of CGA S-1.3 and shall not be field adjustable. Pressure relief valves shall discharge in a manner that does not endanger personnel who are in the area. Valves, plugs or caps shall not be installed in the discharge of a pressure relief valve. Where discharge piping is used the end shall not be threaded.

L104.8 Materials and equipment. Pressurized system components shall be *listed* or *approved* for their intended use and rated for the maximum allowable design pressure in the system. Piping and fittings shall be stainless steel.

L104.9 Welded connections. Piping connections that are concealed shall be welded.

L104.10 Protection of piping. System piping shall be protected from physical damage in an *approved* manner.

L104.11 Compatibility. Fittings and connections intended to be used by the fire department shall be compatible with the fire department's equipment.

L104.12 Security. Connections to a FARS shall be safeguarded from unauthorized access in an *approved* manner.

L104.13 Fill stations. Fire fighter air replenishment fill stations shall comply with Section L104.13.1 through L104.13.3.

L104.13.1 Location. Fill stations for refilling breathing air cylinders shall be located as follows:

1. Fill stations shall be provided at the fifth floor above and below the ground level floor and every third floor level thereafter.
2. On floor levels requiring fill stations, one fill station shall be provided adjacent to a required exit stair at a location designated by the *fire code official*. In buildings required to have three or more exit stairs, additional fill stations shall be provided at a ratio of one fill station for every three stairways.

L104.13.2 Design. Fill stations for breathing air cylinders shall be designed to meet the following requirements:

1. A pressure gauge and pressure-regulating devices and controls shall be provided to allow the operator to control the fill pressure and fill rate on each cylinder fill hose.
2. Valves controlling cylinder fill hoses shall be slow-operating valves.
3. A separate flow restriction device shall be provided on each fill hose.
4. A method shall be provided to bleed each cylinder fill hose.
5. The fill station shall be designed to provide a containment area that fully encloses any cylinder being filled and flexible cylinder fill hoses, and directs the energy from a failure away from personnel. Fill stations shall be designed to prohibit filling of cylinders that are not enclosed within the containment area.

   Exception: Where required or *approved* by the fire chief, fill stations providing for the direct refilling of the fire fighters' breathing air cylinders using Rapid Intervention Crew/Company Universal Air Connection (RIC/UAC) fittings shall be used in lieu of cylinder fill stations that utilize containment areas.

L104.13.3 Cylinder refill rate. Fill stations shall be capable of simultaneously filling two or more empty breathing air cylinders equivalent to those used by the fire department to the cylinders' design pressure within 2 minutes.

L104.14 External mobile air connection. An external mobile air connection shall be provided for fire department mobile air apparatus where required by Section L104.5 to supply the system with breathing air.

L104.14.1 Location. The location of the external mobile air connection shall be accessible to mobile air apparatus and *approved* by the fire chief.

L104.14.2 Protection from vehicles. A means of vehicle impact protection in accordance with Section 312 shall be provided to protect mobile air connections that are subject to vehicular impact.

L104.14.3 Clear space around connections. A working space of not less than 36 inches (914 mm) in width, 36 inches (914 mm) in depth and 78 inches (1981 mm) in height shall be provided and maintained in front of and to the sides of external mobile air connections.

L104.15 Air monitoring system. An *approved* air monitoring system shall be provided. The system shall automatically monitor air quality, moisture and pressure on a continual basis. The air monitoring system shall be equipped with not less than two content analyzers capable of detecting carbon monoxide, carbon dioxide, nitrogen, oxygen, moisture and hydrocarbons.

L104.15.1 Alarm conditions. The air monitoring system shall transmit a supervisory signal when any of the following levels are detected:

1. Carbon monoxide exceeds 5 ppm.
2. Carbon dioxide exceeds 1,000 ppm.
3. An oxygen level below 19.5 percent or above 23.5 percent.
4. A nitrogen level below 75 percent or above 81 percent.
5. Hydrocarbon (condensed) content exceeds 5 milligrams per cubic meter of air.

6. The moisture concentration exceeds 24 ppm by volume.

7. The pressure falls below 90 percent of the maintenance pressure specified in Section L104.3.

L104.15.2 Alarm supervision, monitoring and notification. The air monitoring system shall be electrically supervised and monitored by an *approved* supervising station, or where *approved*, shall initiate audible and visual supervisory signals at a constantly attended location.

L104.15.3 Air quality status display. Air quality status shall be visually displayed at the external mobile air connection required by Section L104.14.

SECTION L105
ACCEPTANCE TESTS

L105.1 Acceptance tests. Upon completion of the installation, a FARS shall be acceptance tested to verify compliance with equipment manufacturers' instructions and design documents. Oversight of the acceptance tests shall be provided by a registered design professional. Acceptance testing shall include all of the following:

1. A pneumatic test in accordance with ASME B31.3 of the complete system at a minimum test pressure of 110 percent of the system design pressure using oil free dry air, nitrogen or argon shall be conducted. Test pressure shall be maintained for not less than 24 hours. During this test, all fittings, joints and system components shall be inspected for leaks. Defects in the system or leaks detected shall be documented and repaired.

2. A cylinder-filling performance test shall be conducted to verify compliance with the required breathing air cylinder refill rate from the exterior mobile air connection and, where provided, a stored air pressure supply system.

3. The air quality monitoring system shall be tested to verify both of the following conditions:

   3.1. Visual indicators required by Section L104.15.1 function properly.

   3.2. Supervisory signals are transmitted as required by Section L104.15.2 for each sensor based on a sensor function test.

4. Connections intended for fire department use shall be confirmed as compatible with the fire department's mobile air unit, SCBA cylinders and, where provided, RIC/UAC connections.

5. Air samples shall be taken from not less than two fill stations and submitted to an *approved* gas analysis laboratory to verify compliance with NFPA 1989. The FARS shall not be placed into service until a written report verifying compliance with NFPA 1989 has been provided to the *fire code official.*

SECTION L106
INSPECTION, TESTING AND MAINTENANCE

L106.1 Periodic inspection, testing and maintenance. A FARS shall be continuously maintained in an operative condition and shall be inspected not less than annually. Not less than quarterly, an air sample shall be taken from the system and tested to verify compliance with NFPA 1989. The laboratory test results shall be maintained on site and readily available for review by the *fire code official.*

SECTION L107
REFERENCED STANDARDS

ASME B31.3—2012	Process Piping	L104.2.1, L105.1
CGA S-1.3—2008	Pressure Relief Device Standards – Part 3 Stationary Storage Containers for Compressed Gases	L104.7
NFPA 1901—09	Standard for Automotive Fire Apparatus	L104.5.1,
NFPA 1989—13	Breathing Air Quality for Fire Emergency Services Respiratory Protection	L104.2.2, L105.1, L106.1

APPENDIX M

HIGH-RISE BUILDINGS—RETROACTIVE AUTOMATIC SPRINKLER REQUIREMENT

Deleted.

Appendix J 12/3/2018

D. Bryan Phillips
Director

D. Scot Brooks, CEM, CCEMTP
Deputy Director - Emergency Management

E. Grant Hunsucker
EMS Chief

Moore County
Department of Public Safety

Bryan M. Lyczkowski, CFI
Deputy Fire Marshal

Joe Mancos, AAS, Paramedic
Logistics/Education Chief

Jason Steel
911 Chief

December 3, 2018

NC Highway Patrol – Viper Project
Ron Moore
DPS Property Manager
NC Department of Public Safety
Purchasing and Logistics
MSC 4227
3030 Hammond Business Place
Raleigh, NC 27603

Dear Mr. Moore,

This letter is to confirm Moore County's desire to renew the Lease Agreement for communication antenna space on your telecommunications facility located on Glendon-Carthage Road in Carthage, NC 28327 for an additional five (5) years term effective October 1, 2018 making the new termination date September 30, 2023. If you have any additional question or need any additional information, please let us know.

Sincerely yours,

Chairman, Moore County Board of Commissioners

302 S. McNeill Street
Carthage, NC 28327

P.O. Box 905
Carthage, NC 28327
www.moorecountync.gov

Phone: 910-947-6317
Fax: 910-947-6378

Appendix K
12/3/2018

MOORE COUNTY BOARD OF COMMISSIONERS
THE STATE OF NORTH CAROLINA

RESOLUTION LEVYING AN ADDITIONAL ONE-QUARTER CENT (1/4¢)
COUNTY SALES AND USE TAX

WHEREAS, the General Assembly has authorized county boards of commissioners across the State of North Carolina to levy a one-quarter percent (.25%) county sales and use tax, contingent on an advisory referendum in which the majority of those casting ballots voted for the levy of the tax; and

WHEREAS, the Moore County Board of Commissioners directed the Moore County Board of Elections to conduct an advisory referendum on the question of whether to levy the One-Quarter Center (1/4¢) County Sales and Use Tax in Moore County on the 6th day of November 2018; and

WHEREAS, the ballots were cast 58.87% FOR and 41.13% AGAINST the levy of the One-Quarter Cent (1/4¢) County Sales and Use Tax; and

WHEREAS, the Board has provided the required 10 days public notice of the Board's intent to consider this resolution to levy the tax; and

WHEREAS, the Moore County Board of Commissioners hereby finds that the levy of the One-Quarter Cent (1/4¢) County Sales and Use Tax is necessary to help address and alleviate fiscal constraints with Moore County; and

NOW, THEREFORE, BE IT RESOLVED by the Moore County Board of Commissioners:

(1) There is hereby levied within Moore County the One-Quarter Center (1/4¢) County Sales and Use Tax, authorized in Section 31.17(b) of the Current Operations and Capital Improvements Appropriations Act of 2007 (Session Law 2007-323).

(2) Collection of the tax by the North Carolina Secretary of Revenue, shall begin on and continue after the 1st day of April 2019.

(3) The net proceeds of the tax levied herein shall be distributed by the Secretary of Revenue to Moore County in accordance with Article 39 Chapter 105 of the North Carolina General Statutes. Notwithstanding the provisions of Article 39 of Chapter 105, the additional One-Quarter Cent (1/4¢) County Sales and Use Tax does not apply to the sales price of food that is exempt from tax pursuant to N.C.G.S. 105-164.13B. The Secretary shall not divide the amount allocated to a county between Moore County and the municipalities within Moore County.

(4) This Resolution is effective upon its adoption, and a certified copy hereof shall be forwarded to the Secretary of the North Carolina Department of Revenue, P.O. Box 25000, Raleigh, NC 27640, along with a certified copy of the Moore County Board of Election results from the advisory referendum.

Adopted this 3rd day of December 2018.

COUNTY OF MOORE CORPORATE SEAL NORTH CAROLINA

(SEAL)

Laura M. Williams, Clerk to the Board

Chairman