MOORE COUNTY BOARD OF COMMISSIONERS

MONDAY, DECEMBER 3, 2018, 5:30 P.M.

ORGANIZATIONAL AND REGULAR MEETING

CALL TO ORDER – *Laura Williams, Clerk to the Board*

INVOCATION – *Reverend Adam Beddingfield, 705 Church of God of Prophecy*

PLEDGE OF ALLEGIANCE – *The Honorable Judy Martin, Register of Deeds*

I. OATHS OF OFFICE

A. Commissioner Catherine Graham *(District I)*

B. Commissioner Otis Ritter *(District III)*

C. Commissioner Jerry Daeke *(District V)*

II. ELECTION OF CHAIR

III. ELECTION OF VICE CHAIR

IV. RECESS FOR RECEPTION *(Rotunda, 1st Floor)*

V. RECONVENE *(6:30 p.m.)*

VI. PUBLIC COMMENT PERIOD *(procedures attached to agenda)*

VII. ADDITIONAL AGENDA

VIII. APPROVAL OF CONSENT AGENDA

All items listed below are considered routine and will be enacted by one motion. No separate discussion will be held except on request of a member of the Board of Commissioners.

A. Public Official Bonds
B. Minutes: November 20, 2018 Regular Meeting
C. Budget Amendments
D. Digital Learning Invoices for Moore County Schools
E. FY19 Juvenile Crime Prevention Council Funding Plan Revision
F. Resolution Authorizing Upset Bid Process for LRK # 00026840
G. Deed of Dedication for Winston Pines
H. Sheriff Fee for Off Duty Assignment Pay
I. Amendment of FY19 Budget Ordinance, Section 10 for Sheriff's Office

IX. RECOGNITIONS

A. Coach Chris Metzger – 2018 Most Valuable Coach Award Recipient

X. PUBLIC HEARINGS

A. Public Hearing/Planning – Text Amendments to the Unified Development Ordinance *(Debra Ensminger)*

B. Public Hearing/GIS – Amendments to the Road Name and Addressing Ordinance *(Rachel Patterson)*

XI. OLD BUSINESS

XII. NEW BUSINESS

A. Public Works – Request for Approval of Fee Schedule Amendment for Moore County Landfill Transfer Station *(Chad Beane)*

B. Public Works – Request for Approval of Contract for Removal and Hauling of Mulch from Landfill *(Chad Beane)*

C. Cooperative Extension – Request for NCSU Fork to Farmer Authorization for Application *(Deborah McGiffin)*

D. Social Services – Request for Approval of Modification Agreement to Memorandum of Understanding between Moore County and NCDHHS *(Laura Cockman)*

E. Sheriff's Office – Request for Inmate Services Award Standard Waiver *(Bill Flint)*

F. Public Safety – Request for Adoption of 2018 Fire Code *(Bryan Phillips)*

G. Public Safety – Request for Renewal of Lease on Carthage VIPER Tower *(Bryan Phillips)*

H. Public Safety – Request for Approval of Purchase and Contract for Service for EMS Stretchers *(Bryan Phillips)*

I. Administration – Request for Approval of Contract with Riley Paving, Inc. *(Rich Smith)*

J. Administration – Request for Approval of Resolution Levying an Additional One-Quarter Cent County Sales and Use Tax *(Wayne Vest)*

XIII. APPOINTMENTS

A. Courthouse Facilities Advisory Committee
B. Fire Commission
C. Juvenile Crime Prevention Council
D. Local Emergency Planning Committee
E. Nursing and Adult Care Home Community Advisory Committee
F. Transportation Advisory Board

XIV. ADDITIONAL AGENDA

XV. MANAGER'S REPORT

XVI. COMMISSIONERS' COMMENTS

ADJOURNMENT

COMMISSIONERS' UPCOMING MEETINGS/EVENTS:

- **Juvenile Crime Prevention Council,** Tuesday, December 4, 8:00am *(Graham)*
- **Board of Health,** Tuesday, December 4, 6:00pm *(Gregory)*
- **Partners Executive Board,** Friday, December 7, 8:00am *(Quis)*
- **Courthouse Facilities Committee,** Friday, December 7, 10:00am *(Graham / Daeke)*
- **Board of Education,** Monday, December 10, 6:00pm *(Graham)*
- **Partners Full Board,** Tuesday, December 11, 8:00am *(Gregory / Quis)*
- **Airport Authority,** Tuesday, December 11, 10:00am *(Quis)*
- **Sandhills Center,** Tuesday, December 11 *(Ritter)*
- **NCACC Board,** Thursday-Friday, December 14-15 *(Gregory)*
- **Social Services Board,** Monday, December 17, 5:30pm *(Graham)*
- **Christmas Holidays,** County Offices Closed, Monday-Wednesday, December 24-26
- **New Year Holiday,** County Offices Closed, Tuesday, January 1
- **Pre-agenda,** Wednesday, January 2, 9:30am
- **Regular Meeting,** Tuesday, January 8, 10:30am

PUBLIC COMMENT PROCEDURES
MOORE COUNTY BOARD OF COMMISSIONERS

The Moore County Board of Commissioners is committed to allowing members of the public an opportunity to offer comments and suggestions for the efficient and effective administration of government. In addition to public hearings, a special time is set aside for the purpose of receiving such comments and suggestions. All comments and suggestions addressed to the Board during the Public Comment Period shall be subject to the following procedures:

1. *The Public Comment period will be held at the beginning of the Board meeting. The comment period will be limited to a maximum of thirty minutes.*

2. *Persons who wish to address the Board during the Public Comment Period will register on a sign-up sheet available on the table outside the entrance door to the Commissioners' Meeting Room indicating contact information and topic. Sign-up sheets will be available beginning 30 minutes before the start of the meeting. No one will be allowed to have his/her name placed on the list by telephone request to County Staff.*

3. *Each person signed up to speak will have three (3) minutes to make his/her remarks. Each person signed up to speak will only be entitled to the time allotted to each speaker and one additional time period which may be yielded to him/her by another individual who has also signed up to speak on a particular topic.*

4. *Speakers will be acknowledged by the Board Chairperson in the order in which their names appear on the sign-up sheet. Speakers will address the Board from the lectern at the front of the room and begin their remarks by stating their name and address.*

5. *Public comment is not intended to require the Board to answer any impromptu questions. Speakers will address all comments to the Board as a whole and not one individual commissioner. Discussions between speakers and members of the audience will not be allowed.*

6. *Speakers will be courteous in their language and presentation. Matters or comments which are harmful, discriminatory or embarrassing to any citizens, official or employee of Moore County shall not be allowed. Speaker must be respectful and courteous in their remarks and must refrain from personal attacks and the use of profanity.*

7. *Only one speaker will be acknowledged at a time. If the time period runs out before all persons who have signed up get to speak, those names will be carried over to the next Public Comment Period.*

8. *Any applause will be held until the end of the Public Comment Period.*

9. *Speakers who have prepared written remarks or supporting documents are encouraged to leave a copy of such remarks and documents with the Clerk to the Board.*

10. *Speakers shall not discuss any of the following: matters which concern the candidacy of any person seeking public office, including the candidacy of the person addressing the Board; matters which are closed session matters, including but not limited to matters within the attorney-client privilege, anticipated or pending litigation, personnel, property acquisition, matters which are made confidential by law; matters which are the subject of public hearings.*

11. *Information sheets outlining the process for the public's participation in Board meetings will also be available in the rear of the Commissioner's Meeting Room.*

12. *Action on items brought up during the Public Comment Period will be at the discretion of the Board.*

Adopted on the 5th day of March 2007 by a 5 to 0 vote of the Moore County Board of Commissioners.

Revised on the 7th day of April 2015.

Revised on the 7th day of February 2017.

VIII.A.

Agenda Item: Consent
Meeting Date: 12/3/2018

MEMORANDUM TO BOARD OF COMMISSIONERS:

FROM: **Dawn Spivey, Human Resources Director** DS

DATE: **November 26, 2018**

SUBJECT: **Public Official Bonds**

PRESENTER: **Dawn Spivey**

REQUEST:
The Moore County Board of Commissioners perform the annual examination of public official bonds pursuant to N.C.G.S. 58-72-20, specifically, Chief Financial Officer, Register of Deeds, Sheriff, Tax Administrator and Deputy Tax Administrator.

BACKGROUND:
The Board of Commissioners is required by G.S. 58-72-20 to examine annually the official bonds for public officers within Moore County as referenced above.

IMPLEMENTATION PLAN:
Execute the Resolution

FINANCIAL IMPACT STATEMENT:
Bond premiums for the Chief Finance Officer, Register of Deeds, Tax Administrator and Deputy Tax Administrator has been paid through 7/1/2019 at an annual cost of $2,800. Additionally, the bond premium for the Sheriff's bond is $305 and will be paid upon receipt of invoice through the expiration date of 12/3/2022. Bond premiums are paid from the County's risk management fund.

RECOMMENDATION SUMMARY:
Make a motion to examine the bonds authorizing the Official Bonds for Chief Financial Officer in the amount of $250,000, Register of Deeds in the amount of $50,000, Sheriff in the amount of $25,000, Tax Administrator and Deputy Tax Administrator, in the amount of $250,000 each, as recommended by The Ohio Casualty Insurance Company and Western Surety Company, and approve the attached Resolution, and authorize the Chairman to execute the same.

SUPPORTING ATTACHMENTS:
Resolution
N.C.G.S: 58-72-20; 58-72-10; 159-29(a); 161-4(a); 162-8; 105-349(c)
Bonds
Ohio Casualty Insurance Company
Western Surety Company
Public Employees Schedule Bond Declarations

RESOLUTION REGARDING THE EXAMINATION OF OFFICIAL BOND FOR PUBLIC OFFICIALS OF MOORE COUNTY, NORTH CAROLINA

WHEREAS, N.C.G.S. 58-72-20 requires careful examination of the bonds of the officers named in N.C.G.S. 58-72-10, and herein, at their first meeting in December of every year, to insure sufficient surety for the term of the office to which such officer is chosen:

1. **Chief Finance Officer**: Pursuant to N.C.G.S. 159-29(a) the finance officer shall give a true accounting and faithful performance bond with sufficient sureties in an amount to be fixed by the governing board, not less than fifty thousand dollars ($50,000). The premium on the bond shall be paid by the local government. *(Insurance recommendation: two hundred fifty thousand dollars ($250,000))*
2. **Register of Deeds**: N.C.G.S. 161-4(a) requires bond of not less than ten thousand dollars ($10,000) nor more than fifty thousand dollars ($50,000) to be approved by the Board of Commissioners, payable to the State and conditioned for the safekeeping of the books and records, and for the faithful discharge of the duties of the office. *(Insurance recommendation fifty thousand dollars ($50,000))*
3. **Sheriff** – N.C.G.S. 162-8 states the amount of the bond shall be determined by the Board of Commissioners, but shall not exceed twenty-five thousand dollars ($25,000). *(Insurance recommendation twenty-five thousand dollars ($25,000))*
4. **Tax Administrator and Deputy Tax Administrator**: Pursuant to N.C.G.S. 105-349(c) no tax collector shall be allowed to begin duties until he/she shall have furnished bond conditioned upon the collector's honesty and faithful performance in such an amount as the governing body may prescribe. A tax collector shall not be permitted to collect any taxes not covered by his/her bond. *(Insurance recommendation two hundred fifty thousand dollars ($250,000) for each officer)*

WHEREAS, the Moore County Finance Office has secured from The Ohio Casualty Insurance Company and Western Surety Company, the attached official bonds for the above referenced public officials in the amounts recommended for the Moore County Board of Commissioners' consideration and approval.

NOW THEREFORE BE IT RESOLVED by the Moore County Board of Commissioners that Official Bonds for the public officials referenced above in the recommended amounts from The Ohio Casualty Insurance Company and Western Surety Company have been examined and approved, and authorizes its Chairman to execute the Resolution.

Adopted this 3rd day of December, 2018.

_____
Chairman
Moore County Board of Commissioners

_____
Laura M. Williams
Clerk to the Board

§ 58-72-20. Annual examination of bonds; security strengthened.

The bonds of the officers named in G.S. 58-72-10 shall be carefully examined on the first Monday in December of every year, and if it appears that the security has been impaired, or for any cause become insufficient to cover the amount of money or property or to secure the faithful performance of the duties of the office, then the bond shall be renewed or strengthened, the insufficient security increased within the limits prescribed by law, and the impaired security shall be made good; but no renewal, or strengthening, or additional security shall increase the penalty of said bond beyond the limits prescribed for the term of office. (1869-70, c. 169; 1876-7, c. 275, s. 5; Code, s. 1874; 1895, c. 207, s. 4; 1899, c. 54, s. 54; Rev., s. 308; C.S., s. 327.)

Cross References. — As to amount of bond of coroners, see G.S. 152-3. As to amount of bond of local finance officer, see G.S. 159-29. As to amount of bond of registers of deeds, see G.S. 161-4. As to amount of bond of sheriffs, see G.S. 162-8.

§ 58-72-25. Effect of failure to renew bond.

Upon the failure of any such officer to make such renewal of his bond, it is the duty of the board of commissioners, by an order to be entered of record, to declare his office vacant, and to proceed forthwith to appoint a successor, if the power of filling the vacancy in the particular case is vested in the board of commissioners; but if otherwise, the said board shall immediately inform the proper person having the power of appointment of the fact of such vacancy. (1869-70, c. 169, s. 2; Code, s. 1875; Rev., s. 309; C.S., s. 328.)

§ 58-72-30. Justification of sureties.

Every surety on an official bond required by law to be taken or renewed and approved by the board of commissioners shall take and subscribe an oath before the chairman of the board or some person authorized by law to administer an oath, that he is worth a certain sum (which shall be not less than one thousand dollars ($1,000)) over and above all his debts and liabilities and his homestead and personal property exemptions, and the sum thus sworn to shall in no case be less in the aggregate than the penalty of the bond. But nothing herein shall be construed to abridge the power of the said board of commissioners to require the personal presence of any such surety before the board when the bond is offered, or at such subsequent time as the board may fix, for examination as to his financial condition or other qualifications as surety. (1869-70, c. 169, s. 3; 1879, c. 207; Code, s. 1876; 1889, c. 7; 1891, c. 385; 1901, c. 32; Rev., s. 310; C.S., s. 329.)

cited, will, under the operation of this section, be sustained as an official bond. Shuster v. Perkins, 46 N.C. 325 (1854).

No Penalty Named in Guardian's Bond. — Where defendants signed a bond intending to make it the guardian bond of their principal, but there was no penalty named in the bond the same being filled in subsequent to the signature, it was held that this section does not apply, as it is confined to bonds wherein the amount of penalty varies from that fixed by law, being either more or less than the amount. Rollins v. Ebbs, 137 N.C. 355, 49 S.E. 341 (1904); Rollins v. Ebbs, 138 N.C. 140, 50 S.E. 577 (1905).

Who May Sue. — The chairman of a board of fence commissioners, although not named in the tax collector's bond, may bring suit on the same under this section, when the latter fails to pay the money collected for the erection of fences. Speight v. Staton, 104 N.C. 44, 10 S.E. 86 (1889).

Where a register of deeds issued a license for the marriage of a girl under 18 without the consent of her father, the father is the person injured within the meaning of this section. Joyner v. Roberts, 112 N.C. 111, 16 S.E. 917 (1893).

Cited in Barnes v. Lewis, 73 N.C. 138 (1875).

§ 58-72-5. Penalty for officer acting without bond.

Every person or officer of whom an official bond is required, who presumes to discharge any duty of his office before executing such bond in the manner prescribed by law, is liable to a forfeiture of five hundred dollars ($500.00) to the use of the State for each attempt so to exercise his office. The clear proceeds of forfeitures provided for in this section shall be remitted to the Civil Penalty and Forfeiture Fund in accordance with G.S. 115C-457.2. (R.C., c. 78, s. 8; Code, s. 1882; Rev., s. 278; C.S., s. 325; 1998-215, s. 91.)

Effect of Amendments. — The 1998 amendment, effective October 31, 1998, added the last sentence.

CASE NOTES

Quoted in Langley v. Taylor, 245 N.C. 59, 95 S.E.2d 115 (1956).

Stated in Moffitt v. Davis, 205 N.C. 565, 172 S.E. 317 (1934).

§ 58-72-10. Condition and terms of official bonds.

Every treasurer, sheriff, coroner, register of deeds, surveyor, and every other officer of the several counties who is required by law to give a bond for the faithful performance of the duties of his office, shall give a bond for the term of the office to which such officer is chosen. (1869-70, c. 169; 1876-7, c. 275, s. 5; Code, s. 1874; 1895, c. 207, s. 4; 1899, c. 54, s. 54; Rev., s. 308; C.S., s. 326; 1985, c. 438.)

CASE NOTES

Quoted in State ex rel. Cain v. Corbett, 235 N.C. 33, 69 S.E.2d 20 (1952).

Stated in Moffitt v. Davis, 205 N.C. 565, 172 S.E. 317 (1934); Town of Scotland Neck v. Western Sur. Co., 301 N.C. 331, 271 S.E.2d 501 (1980).

§ 58-72-15. When county may pay premiums on bonds.

In all cases where the officers or any of them named in G.S. 58-72-10 are required to give a bond, the county commissioners of the county in which said officer or officers are elected are authorized and empowered to pay the premiums on the bonds of any and all such officer or officers. The board of commissioners of any county are further authorized and empowered to require individual or blanket bonds for any or all assistants, deputies or other persons

CHAPTER 5

Bonds

A. Public Official Bonds

1. County Finance Officer

North Carolina law requires the county finance officer to give a true accounting and faithful performance bond in an amount not less than $10,000 nor more than $250,000, with the exact amount to be fixed by the board of commissioners. G.S. 159-29(a). Only one bond is required for the finance officer, and the county must pay the premium on it.

G.S. 159-29(b) also requires that each officer, employee or agent of a county government who handles or has in his custody more than $100 of the county's funds at any time, or who handles or has access to the county's inventories, shall, before assuming his duties, give a faithful performance bond payable to the county. The statute also provides that the board of commissioners determines the amount of the bond and may elect to have the county pay the premium on the bond. Each bond required by G.S. 159-29(b) must be deposited with the clerk to the board, after approval. When another statute requires a county officer or employee to be bonded, and additional bond is not required for that person under G.S. 159-29(b).

Instead of providing a separate bond for each county employee, the county may purchase a blanket faithful performance bond to cover most of its employees. G.S. 159-29(c). ***Separate bonds must continue to be obtained for certain elected officers, the county tax collector, and the county finance officer*** (see chart on next page).

2. Other Specific Bonds

Several statutes require specific elected or appointed county officials to give a bond for the faithful performance of the duties of the office. For such officials, the bond must be given for the term of office to which the officer is chosen. G.S. 109-3. Following is a summary of statutorily required public official bonds:

(1)	**County Finance Officer**--bond in amount not less than $10,000 nor more than $250,000.	G.S. 159-29(a)
(2)	**County tax collector**--bond must be given for satisfactory collection of taxes; amount in discretion of board of commissioners.	G.S. 105-349(c)
	Deputy tax collectors--bonding level also established by board of commissioners.	G.S. 105-349(f)
(3)	**Register of deeds**--bond of not less than $10,000 nor more than $50,000, approved by the board of commissioners, and payable to the state.	G.S. 161-4
(4)	**Sheriff**--bond of not more than $25,000, for due execution and return of process, payment of fees and monies collected, and faithful execution of office.	G.S. 162-8
(5)	**Coroner**--bond in amount of $2,000, approved by board of commissioners, and payable to the State.	G.S. 152-3
(6)	**Clerk of Superior Court**--individual or blanket bonds for clerk and any persons employed in clerk's office, with amount of bonds determined by Administrative Officer of the Courts, bonds made payable to State, and premiums paid by State.	G.S. 7A-107

3. Procedure for Public Official Bonds

The approval of all official bonds taken or renewed by the board of commissioners must be recorded by the clerk to the board. G.S. 58-72-50. The Clerk is required to record in the proceedings of the board the names of the commissioners who are present at the time of approval, and who vote for such approval. Any commissioner is entitled to have his written dissent entered in the board records. Any clerk who neglects to make a record of bond approvals shall forfeit his or her office and may be subject to other punishment. G.S. 58-72-55.

The custody of official bonds is determined by G.S. 58-72-50. The bond is registered in the register of deeds office in a separate book kept for the registration of official bonds, and the original bond is deposited with the clerk of superior court, except that the bond for the clerk of court is deposited with the register of deeds. The original bond must have the board of commissioners approval endorsed thereon and be certified by the chairman.

The board of commissioners *may* authorize the county to pay the premium on the bonds of any or all county officers and employees who are bonded. G.S. 58-72-15. As noted earlier, the county must pay the premium on the bond required of the county finance officer by G.S. 159-29(a).

The board of commissioners is required, on the first Monday in December each year, to examine carefully the bonds of the public officers listed in G.S. 58-72-10 who are required to give a faithful performance bond, and the board must strengthen the security for the bond, if necessary. G.S. 58-72-20. If a public officer fails to make renewal of his bond, the board of commissioners must by order declare the office vacant; the vacancy is to be filled by the appropriate appointing authority. G.S. 58-72-25.

Any county commissioner who approves an official bond when he knows or should have known that the bond is insufficient is liable to civil suit by any person having a cause of action on the insufficient bond. G.S. 58-72-60. In any such civil action, a copy of the relevant proceedings of the board of commissioners, certified by the clerk under his hand and the seal of the county, will be conclusive evidence of the facts contained in the record. G.S. 58-72-65. There is no civil liability against a commissioner for failure to require any bond at all, but the commissioner can be charged with a criminal misdemeanor in such a case.

Every person who is required to be covered by an official bond, who attempts to discharge any official duty before lawfully executing such bond, is liable to forfeiture of $500 to the State for each attempt to exercise the office. G.S. 58-72-5. The criminal law of North Carolina makes it a misdemeanor for any public officer to enter on the duties of his office before

executing and delivering the required bond; and, any such officer is required to be ejected from office.

B. Borrowing Money: Issuance of Bonds

When a county government borrows money, it gives or issues to the lender a bond or promissory note. The bond or note states on its face that the county owes its owner a specified amount of money to be paid at a specified time and serves as the county's obligation to repay the borrowed money. Generally, a bond indicates a more long-term debt, anywhere from a few years to 35 or 40 years, than does a note. Issuing bonds is a significant method for a county to finance major capital needs.

The Local Government Bond Act, Article 4 of Chapter 159 of the General Statutes, lists the specific purposes for which counties may issue bonds (See, specifically, G.S. 159-48). In addition, the law authorizes bond issues for any authorized capital cost even though the specific purpose may not be mentioned in the enabling statute.

All local government bonds must be approved and sold by the Local Government Commission, in the Department of the Treasurer. G.S. 159-51 requires any county that is considering a bond issue to make application to the Local Government Commission for approval of the issue. The Secretary of the Commission may call for a preliminary conference with the county officials to discuss the matter. The actual procedures for issuance of bonds are complex and detailed. Commission staff and bond counsel will assist the county to assure compliance with all legal requirements. The clerk will have to exercise certain statutory responsibilities throughout the process.

General Obligation Bonds. General obligation bonds are those bonds issued by a county government where the county makes an express or implied pledge of its power to levy taxes as security for repayment of the loan. In other words, the unit agrees to levy property taxes as necessary to pay the principal and interest on the debt as it comes due. General obligation bonds may be issued only after an approving vote of the people, except that no vote is required for certain purposes listed in G.S. 159-49.

Revenue Bonds. Revenue bonds are those bonds issued by a unit of government, including a county, to finance the acquisition, construction, reconstruction, improvement, enlargement, betterment, or extension of allowable utilities or public service enterprise facilities or systems, either owned or leased by the unit of government. Unlike general obligation bonds, revenue bonds are not secured by a pledge of the county's taxing power. Rather, principal and interest on the bonds are paid solely out of

revenues produced by the utility or public service enterprise. See Article 5 of Chapter 159. Revenue bonds are not subject to voter approval.

Industrial Bonds. Industrial bonds are those bonds issued by a properly established county industrial facilities and pollution control financing authority for the purpose of paying all or any part of the cost of any approved project. Chapter 159C of the General Statutes governs the use of these types of bonds. Payment of both principal and interest on these bonds is provided through agreements between the authority and the project operator and any others who are financially obligated to the approved project.

North Carolina

Western Surety Company

OFFICIAL BOND

KNOW ALL PERSONS BY THESE PRESENTS: Bond No. 72099853

That we, Ronald Alan Fields of Carthage, North Carolina, as Principal, and WESTERN SURETY COMPANY, a corporation duly licensed to do business in the State of North Carolina, as Surety, are held and firmly bound unto County of Moore in the sum of Twenty-Five Thousand and 00/100 DOLLARS ($25,000.00), for the payment of which well and truly to be made, we bind ourselves and our legal representatives, jointly and severally by these presents.

Dated this 19th day of November, 2018.

THE CONDITION OF THE ABOVE OBLIGATION IS SUCH, That whereas, the said Principal has ☐ appointed ☐ elected to the office of Sheriff, for the term beginning the 3rd day of December, 2018, and ending the 3rd day of December, 2022.

NOW THEREFORE, if the said Principal shall in all things faithfully perform the duties of his office and shall honestly account for all moneys and effects that may come into his hands in his official capacity during the said term, then this obligation to be void, otherwise to remain in full force and effect.

This bond is executed by the Surety upon the following express conditions, which shall be conditions precedent to the right of recovery hereunder:

FIRST: The Surety shall not be liable for the loss of any public moneys or funds resulting from the failure or default in payment by any Banks or Depositories in which any public moneys or funds have been deposited.

SECOND: This bond may be cancelled by the Surety as to future liability by giving written notice, by certified mail, addressed to each, the Principal and the Obligee at County of Moore, North Carolina, and thirty (30) days after the mailing of said notices by certified mail, this bond shall be cancelled and null and void as to any liability thereafter arising, the Surety remaining liable, however, subject to all the terms and conditions of this bond for any and all acts covered by this bond up to the date of such

Witness to Principal

Ronald Alan Fields

By: Ronald Alan Fields

Principal

Witness to Surety

WESTERN SURETY COMPANY

By Paul T. Bruflat

Paul T. Bruflat, Senior Vice President

Countersigned NOT NEEDED

North Carolina Resident Agent

Approved this _____ day of _____, _____.

Form 1264-A-11-2002

Western Surety Company

POWER OF ATTORNEY

KNOW ALL MEN BY THESE PRESENTS:

That WESTERN SURETY COMPANY, a corporation organized and existing under the laws of the State of South Dakota, and authorized and licensed to do business in the States of Alabama, Alaska, Arizona, Arkansas, California, Colorado, Connecticut, Delaware, District of Columbia, Florida, Georgia, Hawaii, Idaho, Illinois, Indiana, Iowa, Kansas, Kentucky, Louisiana, Maine, Maryland, Massachusetts, Michigan, Minnesota, Mississippi, Missouri, Montana, Nebraska, Nevada, New Hampshire, New Jersey, New Mexico, New York, North Carolina, North Dakota, Ohio, Oklahoma, Oregon, Pennsylvania, Rhode Island, South Carolina, South Dakota, Tennessee, Texas, Utah, Vermont, Virginia, Washington, West Virginia, Wisconsin, Wyoming, and the United States of America, does hereby make, constitute and appoint

Paul T. Bruflat of Sioux Falls
State of South Dakota, its regularly elected Vice President,
as Attorney-in-Fact, with full power and authority hereby conferred upon him to sign, execute, acknowledge and deliver for and on its behalf as Surety and as its act and deed, the following bond:

One SHERIFF COUNTY OF MOORE

bond with bond number 72099853

for RONALD ALAN FIELDS
as Principal in the penalty amount not to exceed: $25,000.00.

Western Surety Company further certifies that the following is a true and exact copy of Section 7 of the by-laws of Western Surety Company duly adopted and now in force, to-wit:

Section 7. All bonds, policies, undertakings, Powers of Attorney, or other obligations of the corporation shall be executed in the corporate name of the Company by the President, Secretary, any Assistant Secretary, Treasurer, or any Vice President, or by such other officers as the Board of Directors may authorize. The President, any Vice President, Secretary, any Assistant Secretary, or the Treasurer may appoint Attorneys-in-Fact or agents who shall have authority to issue bonds, policies, or undertakings in the name of the Company. The corporate seal is not necessary for the validity of any bonds, policies, undertakings, Powers of Attorney or other obligations of the corporation. The signature of any such officer and the corporate seal may be printed by facsimile.

In Witness Whereof, the said WESTERN SURETY COMPANY has caused these presents to be executed by Vice President with the corporate seal affixed this 19th day of November, 2018.

ATTEST

L. Nelson, Assistant Secretary

WESTERN SURETY COMPANY

By Paul T. Bruflat
Paul T. Bruflat, Vice President

WESTERN SURETY COMPANY CORPORATE SEAL SOUTH DAKOTA

STATE OF SOUTH DAKOTA
COUNTY OF MINNEHAHA } ss

On this 19th day of November, 2018, before me, a Notary Public, personally appeared Paul T. Bruflat and L. Nelson who, being by me duly sworn, acknowledged that they signed the above Power of Attorney as Vice President and Assistant Secretary, respectively, of the said WESTERN SURETY COMPANY, and acknowledged said instrument to be the voluntary act and deed of said Corporation.

J. MOHR
SEAL NOTARY PUBLIC SOUTH DAKOTA SEAL

My Commission Expires June 23, 2021

J. Mohr
Notary Public

To validate bond authenticity, go to www.cnasurety.com > Owner/Obligee Services > Validate Bond Coverage.

Form F1975-1-2016

Batch 5 7/6/18 DS

MARSH

INVOICE

Marsh USA Inc.
Charlotte NC
(704) 374-8000

Page	2 of 2
Invoice Total	**2,800.00 USD**
Invoice No.	159237249480
Invoice Date	06/08/2018
Client No.	1592300000

Billed To: **County of Moore**
Post Office Box 905
Carthage, NC 28327

Surety Name	Bond No	Effective Date	Expiration Date	Transaction Type	Description/ Type of Coverage	Item	Amount
Ohio Casualty Insurance Co	3919164	07/01/2018	07/01/2019	Original	Commercial Bond	PREMIUM	2,800.00

Invoice Comments:

Principal:Moore County
Obligee:NC - State of North Carolina - through Moore County
Bond Amount: $800,000.00
Bond Type - Description:Public Official Bond -
Requester:Dawn Spivey
Register of Deeds $ 50,000 $175.00
Deputy Tax Administrator $250,000 $875.00
Finance Officer for County
and Convention & Visitor
Bureau $250,000 $875.00
Tax Administrator $250,000 $875.00

Renewal

Dawn Spivey 7/6/18

Invoice Total (Payable in Full upon Receipt) 2,800.00

Company earns and retains interest income on premium payments held by Marsh on behalf of insurers during the period between receipt of such payments from clients and the time such payments are remitted to the applicable insurer, where permitted by law.

Spivey, Dawn

From: Dark, Maryann <Maryann.Dark@marsh.com>
Sent: Tuesday, October 28, 2014 11:56 AM
To: Spivey, Dawn
Subject: RE: bond application for Finance Officer

Importance: High

Dawn,

Just a note to advise that I have received approval for Caroline Xiong for coverage as the INTERIM finance officer for the County. Coverage is afforded in the amount of $250,000. If you have any questions or need anything additional, please let me know. Regards,

Maryann

Maryann Dark, Assistant Vice President
Marsh | Surety 100 North Tryon Street, Suite 3600, Charlotte, NC 28202
Phone: 704 374 8353 | Fax: 704 374 8853 | maryann.dark@marsh.com
www.marsh.com

From: Spivey, Dawn [mailto:dspivey@moorecountync.gov]
Sent: Friday, October 24, 2014 2:07 PM
To: Dark, Maryann
Subject: bond application for Finance Officer

Maryann,
Please process the attached application and I will mail the original to you. If any questions please me know.

Thank you and have a great weekend!
Dawn Spivey
Risk & Benefits Manager
County of Moore
PO Box 905
Carthage, NC 28327
910-947-4010
910-947-2792 (fax)

****
his e-mail transmission and any attachments that accompany it may
ontain information that is privileged, confidential or otherwise

4-1-13

MARSH

Maryann Dark
Assistant Vice President

Marsh USA Inc.
100 North Tryon Street
Suite 3200
Charlotte, NC 28202
704 374 8353
Maryann.Dark@Marsh.com
www.marsh.com

March 28, 2013

Ms. Dawn Spivey
County of Moore
Post Office Box 905
Carthage, NC 28327

Subject:
Rider 002 on Position to Public Official Position Schedule Bond
Insured: County of Moore
The Ohio Casualty Insurance Co., Bond No. 3 919 164

Dear Dawn:

Please find enclosed our original Rider that amends the captioned surety bond as follows:

DELETION:

- Finance Director (Carrie Neal) - $250,000

ADDITION:

- Carrie Neal as Finance Director for County and Convention & Visitor Bureau (CVB) in the amount of $250,000

This change is effective as of March 28, 2013.

As mentioned in my email, Carrie Neal is added as a Named individual in lieu of position so that coverage may be afforded jointly for both entities as requested.

This rider should be attached to the original bond dated July 1, 2006.

There is no premium charge for this change.

Marsh & McLennan Companies, Inc. and its subsidiaries own equity interests in certain insurers and have contractual arrangements with certain insurers and wholesale brokers. Information regarding such interests and contracts is available at http://global.marsh.com/about/Transparency.php.

After your review, should you have any questions, please feel free to contact me. Thank you for allowing Marsh to service your surety needs.

MARSH

Best regards,

Maryann Dark
Surety Department

\\ad.us.mrshmc.com\us_users\ctl\mdark\word\letters\endorsement letter for po.doc

Liberty Mutual. The Ohio Casualty Insurance Company

ADDITION AND/OR DEDUCTION NOTICE
POSITION OR NAME SCHEDULE BOND

Notice No. 002

The Ohio Casualty Insurance Company as Surety upon Fidelity Bond No. 3 919 164 in favor of State of North Carolina through Moore County (Insured) does hereby:

(a) Add to the schedule attached to said bond the Employee(s) or Position(s) named in column 3 hereof, in the amount(s) stated in column 4, such addition(s) to be effective on and after the date(s) stated in column I hereof, opposite the name(s) of such Employee(s) or Position(s).

(b) Deduct from said schedule the Employee(s) or Position(s) named in column 3 hereof, presently covered in the amount(s) stated in column 5, such deduction (s) to be effective on and after the date (s) stated in column I hereof, opposite such name (s) or position (s).

(Where there is a change in the amount of coverage on an Employee or Position, the old amount is shown as a deduction in column 5, and the new amount is shown as an addition in column 4.)

Effective Date 1.	Item No. 2.	3.	Amount For Which Added 4.	Amount For Which Deducted 5.	Additional Premium 6.	Return Premium 7.
3/28/2013	1	Name or Position Finance Director	0.00	250,000.00	0.00	0.00
		Location				
3/28/2013	1	Name or Position Carrie Neal, as Finance Director for	250,000.00	0.00	0.00	0.00
		Location County and Convention & Visitor Bureau				
		Name or Position				
—		Location				
		Name or Position				
		Location				
		Name or Position				
		Location				

Total Premium Added $ 0.00

Total Premium Deducted $ 0.00

☐ Net Additional Premium $ 0.00

or

☐ Return Premium $ 0.00

The above changes have been made pursuant to request by the Insured and/or cancellation by the Underwriter.

Maryann Dark

Maryann Dark

Authorized Representative

F - 4557

THIS POWER OF ATTORNEY IS NOT VALID UNLESS IT IS PRINTED ON RED BACKGROUND.
This Power of Attorney limits the acts of those named herein, and they have no authority to bind the Company except in the manner and to the extent herein stated.

Certificate No. 5725634

American Fire and Casualty Company
The Ohio Casualty Insurance Company

Liberty Mutual Insurance Company
West American Insurance Company

POWER OF ATTORNEY

KNOWN ALL PERSONS BY THESE PRESENTS: That American Fire & Casualty Company and The Ohio Casualty Insurance Company are corporations duly organized under the laws of the State of New Hampshire, that Liberty Mutual Insurance Company is a corporation duly organized under the laws of the State of Massachusetts, and West American Insurance Company is a corporation duly organized under the laws of the State of Indiana (herein collectively called the "Companies"), pursuant to and by authority herein set forth, does hereby name, constitute and appoint, Maryann Dark; Judie Chisolm

all of the city of Charlotte, state of NC each individually if there be more than one named, its true and lawful attorney-in-fact to make, execute, seal, acknowledge and deliver, for and on its behalf as surety and as its act and deed, any and all undertakings, bonds, recognizances and other surety obligations, in pursuance of these presents and shall be as binding upon the Companies as if they have been duly signed by the president and attested by the secretary of the Companies in their own proper persons.

IN WITNESS WHEREOF, this Power of Attorney has been subscribed by an authorized officer or official of the Companies and the corporate seals of the Companies have been affixed thereto this 1st day of December, 2012.

American Fire and Casualty Company
The Ohio Casualty Insurance Company
Liberty Mutual Insurance Company
West American Insurance Company

By: Gregory W. Davenport, Assistant Secretary

STATE OF WASHINGTON
COUNTY OF KING ss

On this 1st day of December, 2012, before me personally appeared Gregory W. Davenport, who acknowledged himself to be the Assistant Secretary of American Fire and Casualty Company, Liberty Mutual Insurance Company, The Ohio Casualty Company, and West American Insurance Company, and that he, as such, being authorized so to do, execute the foregoing instrument for the purposes therein contained by signing on behalf of the corporations by himself as a duly authorized officer.

IN WITNESS WHEREOF, I have hereunto subscribed my name and affixed my notarial seal at Seattle, Washington, on the day and year first above written.

By: KD Riley, Notary Public

This Power of Attorney is made and executed pursuant to and by authority of the following By-laws and Authorizations of American Fire and Casualty Company, The Ohio Casualty Insurance Company, Liberty Mutual Insurance Company, and West American Insurance Company which resolutions are now in full force and effect reading as follows:

ARTICLE IV – OFFICERS – Section 12. Power of Attorney. Any officer or other official of the Corporation authorized for that purpose in writing by the Chairman or the President, and subject to such limitation as the Chairman or the President may prescribe, shall appoint such attorneys-in-fact, as may be necessary to act in behalf of the Corporation to make, execute, seal, acknowledge and deliver as surety any and all undertakings, bonds, recognizances and other surety obligations. Such attorneys-in-fact, subject to the limitations set forth in their respective powers of attorney, shall have full power to bind the Corporation by their signature and execution of any such instruments and to attach thereto the seal of the Corporation. When so executed, such instruments shall be as binding as if signed by the President and attested to by the Secretary. Any power or authority granted to any representative or attorney-in-fact under the provisions of this article may be revoked at any time by the Board, the Chairman, the President or by the officer or officers granting such power or authority.

ARTICLE XIII – Execution of Contracts – SECTION 5. Surety Bonds and Undertakings. Any officer of the Company authorized for that purpose in writing by the chairman or the president, and subject to such limitations as the chairman or the president may prescribe, shall appoint such attorneys-in-fact, as may be necessary to act in behalf of the Company to make, execute, seal, acknowledge and deliver as surety any and all undertakings, bonds, recognizances and other surety obligations. Such attorneys-in-fact subject to the limitations set forth in their respective powers of attorney, shall have full power to bind the Company by their signature and execution of any such instruments and to attach thereto the seal of the Company. When so executed such instruments shall be as binding as if signed by the president and attested by the secretary.

Certificate of Designation – The President of the Company, acting pursuant to the Bylaws of the Company, authorizes Gregory W. Davenport, Assistant Secretary to appoint such attorneys-in-fact as may be necessary to act on behalf of the Company to make, execute, seal, acknowledge and deliver as surety any and all undertakings, bonds, recognizances and other surety obligations.

Authorization – By unanimous consent of the Company's Board of Directors, the Company consents that facsimile or mechanically reproduced signature of any assistant secretary of the Company, wherever appearing upon a certified copy of any power of attorney issued by the Company in connection with surety bonds, shall be valid and binding upon the Company with the same force and effect as though manually affixed.

I, David M. Carey, the undersigned, Assistant Secretary, of American Fire and Casualty Company, The Ohio Casualty Insurance Company, Liberty Mutual Insurance Company, and West American Insurance Company do hereby certify that the original power of attorney of which the foregoing is a full, true and correct copy of the Power of Attorney executed by said Companies, is in full force and effect and has not been revoked.

IN TESTIMONY WHEREOF, I have hereunto set my hand and affixed the seals of said Companies this 28 day of March, 2013.

By: David M. Carey, Assistant Secretary

To confirm the validity of this Power of Attorney call 1-610-832-8240 between 9:00 am and 4:30 pm EST on any business day.

Currency, rate, interest rate or residual value guarantees, bank deposit, or credit

LMS 12873 092012

Liberty Mutual. The Ohio Casualty Insurance Company

ADDITION AND/OR DEDUCTION NOTICE
POSITION OR NAME SCHEDULE BOND

Notice No. 002

The Ohio Casualty Insurance Company as Surety upon Fidelity Bond No. 3 919 164 in favor of State of North Carolina through Moore County (Insured) does hereby:

(a) Add to the schedule attached to said bond the Employee(s) or Position(s) named in column 3 hereof, in the amount(s) stated in column 4, such addition(s) to be effective on and after the date(s) stated in column I hereof, opposite the name(s) of such Employee(s) or Position(s).

(b) Deduct from said schedule the Employee(s) or Position(s) named in column 3 hereof, presently covered in the amount(s) stated in column 5, such deduction (s) to be effective on and after the date (s) stated in column I hereof, opposite such name (s) or position (s).

(Where there is a change in the amount of coverage on an Employee or Position, the old amount is shown as a deduction in column 5, and the new amount is shown as an addition in column 4.)

Effective Date 1.	Item No. 2.	3.	Amount For Which Added 4.	Amount For Which Deducted 5.	Additional Premium 6.	Return Premium 7.
3/28/2013	1	Name or Position Finance Director	0.00	250,000.00	0.00	0.00
		Location				
3/28/2013	1	Name or Position Carrie Neal, as Finance Director for	250,000.00	0.00	0.00	0.00
		Location County and Convention & Visitor Bureau				
		Name or Position				
		Location				
		Name or Position				
		Location				
		Name or Position				
		Location				

Total Premium Added $ 0.00

Total Premium Deducted $ 0.00

☐ Net Additional Premium $ 0.00

or

☐ Return Premium $ 0.00

The above changes have been made pursuant to request by the Insured and/or cancellation by the Underwriter.

Maryann Dark

Maryann Dark Authorized Representative

F - 4557

THIS POWER OF ATTORNEY IS NOT VALID UNLESS IT IS PRINTED ON RED BACKGROUND.
This Power of Attorney limits the acts of those named herein, and they have no authority to bind the Company except in the manner and to the extent herein stated.

Certificate No. 5725634

American Fire and Casualty Company
The Ohio Casualty Insurance Company

Liberty Mutual Insurance Company
West American Insurance Company

POWER OF ATTORNEY

KNOWN ALL PERSONS BY THESE PRESENTS: That American Fire & Casualty Company and The Ohio Casualty Insurance Company are corporations duly organized under the laws of the State of New Hampshire, that Liberty Mutual Insurance Company is a corporation duly organized under the laws of the State of Massachusetts, and West American Insurance Company is a corporation duly organized under the laws of the State of Indiana (herein collectively called the "Companies"), pursuant to and by authority herein set forth, does hereby name, constitute and appoint, Maryann Dark; Judie Chisolm

all of the city of Charlotte, state of NC each individually if there be more than one named, its true and lawful attorney-in-fact to make, execute, seal, acknowledge and deliver, for and on its behalf as surety and as its act and deed, any and all undertakings, bonds, recognizances and other surety obligations, in pursuance of these presents and shall be as binding upon the Companies as if they have been duly signed by the president and attested by the secretary of the Companies in their own proper persons.

IN WITNESS WHEREOF, this Power of Attorney has been subscribed by an authorized officer or official of the Companies and the corporate seals of the Companies have been affixed thereto this 1st day of December, 2012.

American Fire and Casualty Company
The Ohio Casualty Insurance Company
Liberty Mutual Insurance Company
West American Insurance Company

By: Gregory W. Davenport, Assistant Secretary

STATE OF WASHINGTON
COUNTY OF KING ss

On this 1st day of December, 2012, before me personally appeared Gregory W. Davenport, who acknowledged himself to be the Assistant Secretary of American Fire and Casualty Company, Liberty Mutual Insurance Company, The Ohio Casualty Company, and West American Insurance Company, and that he, as such, being authorized so to do, execute the foregoing instrument for the purposes therein contained by signing on behalf of the corporations by himself as a duly authorized officer.

IN WITNESS WHEREOF, I have hereunto subscribed my name and affixed my notarial seal at Seattle, Washington, on the day and year first above written.

By: KD Riley, Notary Public

This Power of Attorney is made and executed pursuant to and by authority of the following By-laws and Authorizations of American Fire and Casualty Company, The Ohio Casualty Insurance Company, Liberty Mutual Insurance Company, and West American Insurance Company which resolutions are now in full force and effect reading as follows:

ARTICLE IV – OFFICERS – Section 12. Power of Attorney. Any officer or other official of the Corporation authorized for that purpose in writing by the Chairman or the President, and subject to such limitation as the Chairman or the President may prescribe, shall appoint such attorneys-in-fact, as may be necessary to act in behalf of the Corporation to make, execute, seal, acknowledge and deliver as surety any and all undertakings, bonds, recognizances and other surety obligations. Such attorneys-in-fact, subject to the limitations set forth in their respective powers of attorney, shall have full power to bind the Corporation by their signature and execution of any such instruments and to attach thereto the seal of the Corporation. When so executed, such instruments shall be as binding as if signed by the President and attested to by the Secretary. Any power or authority granted to any representative or attorney-in-fact under the provisions of this article may be revoked at any time by the Board, the Chairman, the President or by the officer or officers granting such power or authority.

ARTICLE XIII – Execution of Contracts – SECTION 5. Surety Bonds and Undertakings. Any officer of the Company authorized for that purpose in writing by the chairman or the president, and subject to such limitations as the chairman or the president may prescribe, shall appoint such attorneys-in-fact, as may be necessary to act in behalf of the Company to make, execute, seal, acknowledge and deliver as surety any and all undertakings, bonds, recognizances and other surety obligations. Such attorneys-in-fact subject to the limitations set forth in their respective powers of attorney, shall have full power to bind the Company by their signature and execution of any such instruments and to attach thereto the seal of the Company. When so executed such instruments shall be as binding as if signed by the president and attested by the secretary.

Certificate of Designation – The President of the Company, acting pursuant to the Bylaws of the Company, authorizes Gregory W. Davenport, Assistant Secretary to appoint such attorneys-in-fact as may be necessary to act on behalf of the Company to make, execute, seal, acknowledge and deliver as surety any and all undertakings, bonds, recognizances and other surety obligations.

Authorization – By unanimous consent of the Company's Board of Directors, the Company consents that facsimile or mechanically reproduced signature of any assistant secretary of the Company, wherever appearing upon a certified copy of any power of attorney issued by the Company in connection with surety bonds, shall be valid and binding upon the Company with the same force and effect as though manually affixed.

I, David M. Carey, the undersigned, Assistant Secretary, of American Fire and Casualty Company, The Ohio Casualty Insurance Company, Liberty Mutual Insurance Company, and West American Insurance Company do hereby certify that the original power of attorney of which the foregoing is a full, true and correct copy of the Power of Attorney executed by said Companies, is in full force and effect and has not been revoked.

IN TESTIMONY WHEREOF, I have hereunto set my hand and affixed the seals of said Companies this 28 day of March, 2013.

By: David M. Carey, Assistant Secretary

Not valid for mortgage, note, loan, letter of credit, bank deposit, currency rate, interest rate or residual value guarantees.

To confirm the validity of this Power of Attorney call 1-610-832-8240 between 8:00 am and 4:30 pm EST on any business day.

LMS 12873 092012

A Member of OCG OHIO CASUALTY GROUP

The Ohio Casualty Insurance Company

136 North Third St., Hamilton, Ohio 45025

PUBLIC EMPLOYEES SCHEDULE BOND

BOND NO. 3 919 164

DECLARATIONS

Item 1. Name of Obligee State of North Carolina through Moore County
of Post Office Box 905, Carthage, NC 28327

Item 2. Bond Period: from the beginning of July 1, 2006
(month, day and year)
to 12:01 A.M. on the effective date of the cancelation or termination of this bond as provided in Condition 4.

Item 3. Employees covered hereunder and limits of liability as to each employee:

1. ITEM NO.	2. NAME OR POSITION	3. LOCATION	4. No. of Positions Bonded	5. Amount of Bond For Each	6. PREMIUM
1.	Finance Officer		1	$250,000	$875.00
2.	Interim Tax Administrator		1	$250,000	$875.00
3.	Deputy Tax Administrator		1	$250,000	$875.00
4.	Register of Deeds		1	$50,000	$175.00

Total Bond Amount $800,000.

(If space insufficient, continue on attached sheet) Total Premium $ 2,800.00

Item 4. The Obligee, by the acceptance of this Bond, gives notice to the Surety terminating or canceling prior bond(s) No(s). Fidelity and Deposit Company of Maryland, Bond #08250349
Such termination or cancellation to be effective as of the time this Bond becomes effective.

SIGNED, SEALED and DATED this 1st day of July, 2006

The Ohio Casualty Insurance Company

By Maryann Dark, Attorney-in-Fact

THE OHIO CASUALTY INSURANCE COMPANY SEAL

F-4583

The Ohio Casualty Insurance Company, hereinafter called the Surety, in consideration of the payment of the premium and subject to the Declarations made a part hereof, and to all the conditions and other terms of this bond, agrees to indemnify the Obligee for direct loss through the failure of any person now or hereafter filling any position named in Item 3 of the Declarations, acting alone or in collusion with others, to perform faithfully his duties during the period that this bond is in force. The amount of indemnity on each position is limited to that amount set forth in Column 5 opposite the name of that position in Item 3 of the Declarations.

This bond is executed and accepted subject to the agreements and limitations set forth in Section A hereof, and to the conditions set forth in Section B hereof, which conditions shall be conditions precedent to recovery hereunder.

Section A-

Continuation — FIRST: This bond, if written for a definite term, may be continued in force from time to time by continuation certificate executed by the Surety.

Liability Non-Cumulative — SECOND: Regardless of the number of years this bond shall continue or be continued in force, and of the umber of annual premiums that shall be payable or paid, the Surety shall not be liable hereunder on account of defaults as aforesaid committed: (a) by any person filling any position covered hereunder for a larger amount in the aggregate than the amount set opposite the name of such position in Item 3 of the Declarations, or for which added thereto; or (b) by any person filling, at the same time or at different times, two or more positions covered hereunder in the same amount, for more in the aggregate than said last mentioned amount; or (c) by any person filling, at the same time or at different times, two or more positions covered hereunder in different amounts, for more in the aggregate than the larger or largest of said last mentioned amounts.

Addition of New Positions — THIRD: If the Obligee shall request the Surety to add to Item 3 of the Declarations any position not named therein, and the Surety shall elect so to do, the Surety shall add the name of such position to Item 3 of the Declarations by written acceptance setting forth the amount of suretyship and the time from which effective.

Cancelation — FOURTH: Either the Surety or the Obligee may cancel this bond as an entirety or as to any person or position, by written notice served upon the other, and specifying therein the effective date of such cancelation. Such date, if the notice be served by the Surety, shall be not less than twenty-five days after such service. In case of cancelation the Surety shall, on written demand, refund to the Obligee any unearned premium, but any premium refunded on account of any position covered hereunder shall be repaid to the Surety in case of payment of loss on account of such position.

Termination as to Employee — FIFTH: This bond shall terminate as to future acts of any person filling any position covered hereunder immediately upon discovery by the obligee of the failure of any such person to faithfully perform his duties.

Obligee Required to Cover all Positions of the Same Designation — SIXTH: In case all of the positions of the same designation are not covered hereunder, then the liability of the Surety on account of any person filling any position of such designation shall not exceed in the aggregate the quotient resulting from dividing the sum total of the amounts carried hereunder on such positions by the number of such positions.

SECTION B-

Notice to Surety of Loss — FIRST: The Obligee shall notify the Surety of any default hereunder on the part of any person filling any position covered hereunder, within a reasonable time after discovery thereof by the Obligee, or if a corporation, by any director thereof by the Obligee, or if a corporation, by director thereof by any officer thereof not in collusion with such person. Such notice shall set forth the name and address of the person causing such loss and the position filled by such person.

Filing of Claim — SECOND: Within ninety days after discovery as aforesaid of any default hereunder, the Obligee shall file with the Surety affirmative proof of loss, itemized and duly sworn to, on proof of loss form in use by the Surety, and shall, if requested by the Surety, produce from time to time, for examination by its representatives, all books, documents and records pertaining to such default.

Filing of Suit — THIRD: Any suit to recover against the Surety on account of loss hereunder shall be brought before the expiration of twelve months from the discovery, as aforesaid, of such default.

Statutory Limitations — FOURTH: If any limitation herein for giving notice, filing proof of loss or bringing suit is prohibited or made void by any law controlling the construction hereof, such limitation shall be deemed to be amended so as to be equal to the minimum period of limitation permitted by such law.

Riders — FIFTH: The liability of the Surety hereunder is subject to the terms and conditions of the following riders attached thereto:

CERTIFIED COPY OF POWER OF ATTORNEY
THE OHIO CASUALTY INSURANCE COMPANY
WEST AMERICAN INSURANCE COMPANY

No. 39-306

Know All Men by These Presents: That THE OHIO CASUALTY INSURANCE COMPANY, an Ohio Corporation, and WEST AMERICAN INSURANCE COMPANY, an Indiana Corporation, pursuant to the authority granted by Article III, Section 9 of the Code of Regulations and By-Laws of The Ohio Casualty Insurance Company and West American Insurance Company, do hereby nominate, constitute and appoint **Judie Chisolm or Maryann Dark of Charlotte, North Carolina** its true and lawful agent (s) and attorney (s)-in-fact, to make, execute, seal and deliver for and on its behalf as surety, and as its act and deed any and all BONDS, UNDERTAKINGS, and RECOGNIZANCES, not exceeding in any single instance **TWO MILLION ($2,000,000.00) DOLLARS**, excluding, however, any bond(s) or undertaking(s) guaranteeing the payment of notes and interest thereon

And the execution of such bonds or undertakings in pursuance of these presents, shall be as binding upon said Companies, as fully and amply, to all intents and purposes, as if they had been duly executed and acknowledged by the regularly elected officers of the Companies at their administrative offices in Fairfield, Ohio, in their own proper persons. The authority granted hereunder supersedes any previous authority heretofore granted the above named attorney(s)-in-fact.

In WITNESS WHEREOF, the undersigned officer of the said The Ohio Casualty Insurance Company and West American Insurance Company has hereunto subscribed his name and affixed the Corporate Seal of each Company this **21st day of April, 2006.**

SEAL SEAL

Sam Lawrence
Sam Lawrence, Assistant Secretary

STATE OF OHIO,
COUNTY OF BUTLER

On this **21st day of April, 2006** before the subscriber, a Notary Public of the State of Ohio, in and for the County of Butler, duly commissioned and qualified, came Sam Lawrence, Assistant Secretary of THE OHIO CASUALTY INSURANCE COMPANY and WEST AMERICAN INSURANCE COMPANY, to me personally known to be the individual and officer described in, and who executed the preceding instrument, and he acknowledged the execution of the same, and being by me duly sworn deposes and says, that he is the officer of the Companies aforesaid, and that the seals affixed to the preceding instrument are the Corporate Seals of said Companies, and the said Corporate Seals and his signature as officer were duly affixed and subscribed to the said instrument by the authority and direction of the said Corporations.

IN TESTIMONY WHEREOF, I have hereunto set my hand and affixed my Official Seal at the City of Hamilton, State of Ohio, the day and year first above written.

Cheryl S. Gregory
Notary Public in and for County of Butler, State of Ohio
My Commission expires August 6, 2007.

This power of attorney is granted under and by authority of Article III, Section 9 of the Code of Regulations and By-Laws of The Ohio Casualty Insurance Company and West American Insurance Company, extracts from which read:

Article III, Section 9. Appointment of Attorneys-in-Fact. The Chairman of the Board, the President, any Vice-President, the Secretary or any Assistant Secretary of the corporation shall be and is hereby vested with full power and authority to appoint attorneys-in-fact for the purpose of signing the name of the corporation as surety to, and to execute, attach the seal of the corporation to, acknowledge and deliver any and all bonds, recognizances, stipulations, undertakings or other instruments of suretyship and policies of insurance to be given in favor of any individual, firm, corporation, partnership, limited liability company or other entity, or the official representative thereof, or to any county or state, or any official board or boards of any county or state, or the United States of America or any agency thereof, or to any other political subdivision thereof

This instrument is signed and sealed as authorized by the following resolution adopted by the Boards of Directors of the Companies on October 21, 2004:

RESOLVED, That the signature of any officer of the Company authorized under Article III, Section 9 of its Code of Regulations and By-laws and the Company seal may be affixed by facsimile to any power of attorney or copy thereof issued on behalf of the Company to make, execute, seal and deliver for and on its behalf as surety any and all bonds, undertakings or other written obligations in the nature thereof; to prescribe their respective duties and the respective limits of their authority; and to revoke any such appointment. Such signatures and seal are hereby adopted by the Company as original signatures and seal and shall, with respect to any bond, undertaking or other written obligations in the nature thereof to which it is attached, be valid and binding upon the Company with the same force and effect as though manually affixed.

CERTIFICATE

I, the undersigned Assistant Secretary of The Ohio Casualty Insurance Company and West American Insurance Company, do hereby certify that the foregoing power of attorney, the referenced By-Laws of the Companies and the above resolution of their Boards of Directors are true and correct copies and are in full force and effect on this date.

IN WITNESS WHEREOF, I have hereunto set my hand and the seals of the Companies this **1st day of July, 2006**

SEAL

Mark E. Schmidt
Assistant Secretary

S-8300 12/99

NCACC Risk Management Pools
Liability and Property

SECTION V
PUBLIC OFFICIALS LIABILITY
CONTRACT DECLARATIONS

Participant	**MOORE COUNTY**
Contract Number	**LP-MO-062-18**
Contract Period	**July 1, 2018 to July 1, 2019**
Effective Time	**12:01 A.M., Eastern Daylight Time**

SCHEDULE OF COVERAGES AND LIMITS	
COVERAGE	**LIMIT**
Coverage Agreement A (per Public Officials Wrongful Act)	**$2,000,000**
Coverage Agreement B (Sexual Misconduct, each person)	**$1,000,000**
Coverage Agreement B (Sexual Misconduct, Contract Period aggregate)	**$1,000,000**
Coverage Agreement C (per Public Officials Wrongful Act)	**$250,000 per Wrongful Act**
Coverage Agreement C (Public Officials Wrongful Act, Contract Period Aggregate)	**$500,000 aggregate**

DEDUCTIBLE	
Coverage Agreement A (per Public Officials Wrongful Act)	**$5,000**
Coverage Agreement B (Sexual Misconduct, each person)	**$5,000**
Coverage Agreement C (per Public Officials Wrongful Act)	**$5,000**

MOORE COUNTY BOARD OF COMMISSIONERS

TUESDAY, NOVEMBER 20, 2018

REGULAR MEETING

The Moore County Board of Commissioners convened for a Regular Meeting at 5:30 p.m., Tuesday, November 20, 2018, in the Commissioners' Meeting Room on the second floor of the Historic Courthouse in Carthage, North Carolina.

Commissioners Present:
Chair Catherine Graham, Vice Chair Otis Ritter, Jerry Daeke, Louis Gregory, Frank Quis

****

Chair Graham called the meeting to order at 5:30 p.m. Reverend Kathryn Dudley of Cameron Presbyterian Church provided the invocation and Assistant County Manager Janet Parris led the Pledge of Allegiance. Chair Graham welcomed everyone and said she was pleased to have so many attendees, and gave a special welcome to members of the military, law enforcement, and elected officials.

PUBLIC COMMENT PERIOD

Mr. Marsh Smith commented regarding development.

Chair Graham asked whether any commissioner had a conflict of interest concerning agenda items the Board would address in the meeting and none was stated.

RECOGNITIONS

Sheriff Neil Godfrey

Sheriff Neil Godfrey offered his thanks to the Board of Commissioners and previous commissioners for their support during his employment with the Sheriff's Office since 2002. He recognized the support of all the staff that had contributed to the success of the department as well. He thanked the citizens for allowing him to be Sheriff. Chair Graham said it was an honor and a privilege for her to read a resolution honoring Sheriff Godfrey. She read the resolution on behalf of the Board and presented it to Sheriff Godfrey. Chair Graham then called upon Commissioner Gregory, a retired law enforcement officer, to present Sheriff Godfrey his service weapon, authorized by resolution of the Board. County Manager Wayne Vest then presented to the Sheriff a plaque and remarked regarding the joy and privilege it had been to work with him. Deputy Marty Key presented Sheriff Godfrey his badge. The resolutions honoring Sheriff Neil Godfrey and awarding him his service weapon and badge are hereby incorporated as a part of these minutes by attachment as Appendix A.

Appointment of Deputy Marty Key as Interim Sheriff

County Manager Wayne Vest presented a request for the appointment of Deputy Marty Key as Interim Sheriff. Sheriff Neil Godfrey was the nominee of the Republican Party when he was elected Sheriff in 2014. As a result, the Executive Committee of the Moore County Republican Party met November 14, 2018, and voted unanimously to recommend Deputy Key be appointed to the office of Sheriff to fill the unexpired term of Sheriff Godfrey upon his retirement November 30, 2018, and until the sheriff-elect would be sworn into office on December 3, 2018. Upon motion made by Chair Graham, seconded by Vice Chair Ritter, the Board voted 5-0 to accept the recommendation of the Moore County Republican Party and appoint Marty Key as Sheriff of Moore County to fill the unexpired term of Sheriff Neil Godfrey upon his retirement on November 30, 2018 and until Sheriff-elect Ronnie Fields is sworn in on December 3, 2018. Deputy Key offered comments regarding the honor it was to have this opportunity and thanked the commissioners, the Republican Party, the Sheriff, and his family.

Chair Graham called for a brief recess and those present visited with and offered best wishes to the Sheriff upon his retirement. The Board reconvened at 6:08 p.m.

Dog Tags

Ms. Mary Jo Morris presented a certificate of appreciation to Sheriff Neil Godfrey for his support of the Dog Tags program. She also presented a certificate to Lieutenant Forrest Kirk. Ms. Morris then recognized the newest participants of the Dog Tags class and introduced the soldiers to the commissioners.

PRESENTATIONS

2020 Census

Mr. Terry Henderson with the U.S. Census Bureau distributed a packet of information on the 2020 census to the commissioners and provided a presentation regarding the same. Upon motion made by Commissioner Daeke, seconded by Vice Chair Ritter, the Board voted 5-0 to create a Complete Count Committee, fund community outreach efforts, and appoint Debra Ensminger as the Moore County 2020 Census Liaison.

CONSENT AGENDA

Upon motion made by Commissioner Quis, seconded by Vice Chair Ritter, the Board voted 5-0 to approve the following consent agenda items:

Minutes: October 31, 2018 Special Meeting
Minutes: November 6, 2018 Regular Meeting
Budget Amendments
Tax Releases/Refunds – October 2018
Animal Services Fee Schedule Amendment

The budget amendments, tax releases/refunds resolutions, and amended Animal Services fee schedule are hereby incorporated as a part of these minutes by attachment as Appendices B, C, and D, respectively.

PUBLIC HEARINGS

Public Hearing/Planning – General Use Rezoning Request: Neighborhood Business B-1 to Rural Agricultural – 40 RA-40

Planning Director Debra Ensminger presented information regarding a General Use Rezoning request by Tammy Allred Forest from Neighborhood Business (B-1) to Residential and Agricultural – 40 (RA-40) of an approximate 6.21 acre parcel located at 3221 Vass Carthage Road and adjacent to Bibey Road, owned by Tammy Allred Forest per Deed Book 2015E, Page 629. Commissioner Quis inquired regarding the intent was for the area to be commercial and Ms. Ensminger said it was a mixture. Commissioner Quis asked if there were any plans to expand the commercial nature and Ms. Ensminger said she did not know. *Commissioner Daeke momentarily left the room.*

Chair Graham opened the duly advertised public hearing regarding this matter. Mr. Jerry Stewart of 645 Bibey Road, an adjacent property owner, spoke in support of the request. He said he preferred it to be rezoned to residential to provide a buffer to the commercial area. He said his only concern would be the density. There being no further speakers, Chair Graham closed the public hearing. Commissioner Daeke returned to the meeting room and because he had missed the public hearing, upon motion made by Chair Graham, seconded by Commissioner Quis, the Board voted 4-0 to excuse Commissioner Daeke from the vote.

Upon motion made by Vice Chair Ritter, seconded by Chair Graham, the Board voted 4-0 to adopt the Land Use Plan Consistency Statement and authorize the Chair to execute the document as required by North Carolina General Statute 153A-341. Upon motion made by Vice Chair Ritter, seconded by Commissioner Quis, the Board voted 4-0 to approve the General Use Rezoning request from Neighborhood Business (B-1) to Residential and Agricultural – 40 (RA-40) of an approximate 6.21 acre parcel located at 3221 Vass Carthage Road and adjacent to Bibey Road, owned by Tammy Allred Forest per Deed Book 2015E, Page 629. The consistency statement and Ms. Ensminger's staff report are hereby incorporated as a part of these minutes by attachment as Appendix E.

Public Hearing/Planning – Text Amendments to Unified Development Ordinance

Planning Director Debra Ensminger presented a request for approval of recommended text amendments to the Unified Development Ordinance. Chair Graham opened the duly advertised public hearing regarding this matter. There were no speakers. Upon motion made by Commissioner Gregory, seconded by Chair Graham, the Board voted 5-0 to adopt the Land Use Plan Consistency Statement and authorize the Chair to execute the document as required by North Carolina General Statute 153A-341. Upon motion made by Chair Graham, seconded by Vice Chair Ritter, the Board voted 5-0 to approve the proposed text amendments to the Moore County Unified Development Ordinance. The consistency statement and Ms. Ensminger's staff report are hereby incorporated as a part of these minutes by attachment as Appendix F.

Call to Public Hearing/Planning – Text Amendments to Unified Development Ordinance

Planning Director Debra Ensminger requested the Board called public hearing regarding proposed text amendments to the Unified Development Ordinance. Upon motion made by Vice Chair Ritter, seconded by Commissioner Gregory, the Board voted 5-0 to call a public hearing on December 3, 2018, at 5:30pm to consider the request for Unified Development Ordinance text amendments.

Call to Public Hearing/GIS – Amendment to the Road Name and Addressing Ordinance

GIS Manager Rachel Patterson requested the Board call a public hearing regarding an amendment to the Road Name and Addressing Ordinance to add roads. Upon motion made by Commissioner Quis, seconded by Vice

Chair Ritter, the Board voted 5-0 to call a public hearing on December 3, 2018, at 5:30pm to consider amendments to the Moore County Road Name and Addressing Ordinance to add 13 roads to the ordinance.

NEW BUSINESS

Airport – Request for Approval of Stormdrain Pipe Inspection and Rehabilitation Project Budget Ordinance Revision 1 and Resolution Revision 1

Airport Director Ron Maness requested the Board's approval of a revised project budget ordinance and resolution for the stormdrain pipe inspection and rehabilitation project at the Airport. Upon motion made by Commissioner Gregory, seconded by Commissioner Quis, the Board voted 5-0 to approve Revision No. 1 – Project Budget Ordinance and Revision No. 1 Resolution for Project # 36237.67.8.1 Stormdrain Rehabilitation Design and Bidding. The ordinance and resolution are hereby incorporated as a part of these minutes by attachment as Appendix G.

Airport – Request for Approval of Project Budget Ordinance and Resolution for Airport Master Plan Update

Airport Director Ron Maness asked the Board to approve a project budget ordinance and resolution for the Airport Master Plan update. Upon inquiry by Commissioner Quis, brief discussion followed regarding the economic development component of the plan. Commissioner Gregory commented that he had recently attended an Airport Authority meeting that was well-run and perfectly managed, and the County was fortunate to have the people there. Upon motion made by Commissioner Gregory, seconded by Vice Chair Ritter, the Board voted 5-0 to approve the project budget ordinance and resolution for Project # 36237.67.9.2 Airport Master Plan Update, including ALP. The ordinance and resolution are hereby incorporated as a part of these minutes by attachment as Appendix H.

Public Safety – Request for Approval of 2019 NC Emergency Management Grant Program Memorandum of Agreement

Public Safety Director Bryan Phillips requested the Board's approval for the County Manager to sign a Memorandum of Agreement for the North Carolina Emergency Management Grant Program. Vice Chair Ritter made a motion to approve for the County Manager to sign the Memorandum of Agreement for the North Carolina Emergency Management Grant Program and any necessary documents associated with this program upon approval by the County Attorney and Finance Director. Commissioner Quis inquired regarding the $77,455 salary for the Emergency Management Program Manager and Mr. Phillips said that these were matching funds provided by the County toward the grant. Commissioner Quis seconded the motion which carried 5-0.

Finance – Request for Approval of Audit Services Contract Amendment for FY18

Chief Financial Officer Caroline Xiong requested the Board's approval of an amendment audit contract with Martin Starnes and Associates. Commissioner Quis asked if it included the Convention and Visitors Bureau and Ms. Xiong said that it did. She said it included all the component units' audited numbers, including the CVB, ABC Board, and Airport. Upon motion made by Chair Graham, seconded by Commissioner Quis, the Board voted 5-0 to approve the amended audit contract form (LGC-205 Amended) with Martin Starnes and Associates CPAs P.A. as presented for Fiscal Year 2018, upon the approval of the County Attorney and Finance Director.

Administration – Request for Authorization to Publish Notice of Intent to Adopt Resolution Levying an Additional One-Quarter Cent County Sales and Use Tax

County Manager Wayne Vest reviewed that a public notice was required regarding the Board's intent to collect the additional quarter cent sales tax approved by the voters of Moore County on November 6, 2018. Upon motion made by Chair Graham, seconded by Vice Chair Ritter, the Board voted 5-0 to authorize staff to publish a Notice of Intent to Adopt a Resolution Levying an Additional One-Quarter Cent County Sales and Use Tax.

APPOINTMENTS

Child Fatality Prevention Team

Upon motion made by Commissioner Daeke, seconded by Vice Chair Ritter, the Board voted 5-0 to appoint Bryan Phillips to the emergency medical services provider / firefighter position on the Moore County Child Fatality Prevention Team.

NCACC Legislative Goals Conference Voting Delegate

Upon motion made by Commissioner Daeke, seconded by Vice Chair Ritter, the Board voted 5-0 to appoint Commissioner Gregory as the voting delegate for the NCACC Legislative Goals Conference.

MANAGER'S REPORT

County Manager Wayne Vest said the annual employee appreciation event held earlier in the day was fantastic and he appreciated the Board's support. He said Department of Aging Director Terri Prots and her staff, who hosted and catered the event, did a great job. He also said he appreciated all the employees who came out. Mr. Vest wished everyone a happy Thanksgiving.

COMMISSIONERS' COMMENTS

Commissioner Gregory reiterated Mr. Vest's comments and wishes for a happy Thanksgiving. He also commented regarding the Most Valuable Coach award given to Coach Metzger of Pinecrest and he proposed recognizing him at the Board's next meeting.

Chair Graham thanked Commissioner Daeke for being present at the meeting despite not feeling well. She wished everyone and happy Thanksgiving and expressed regrets for her absence at the employee event earlier in the day, which was due to a doctor appointment.

ADJOURNMENT

There being no further business, upon motion made by Vice Chair Ritter, seconded by Commissioner Quis, the Board voted 5-0 to adjourn the November 20, 2018, regular meeting of the Moore County Board of Commissioners at 6:59 p.m.

_____
Chair

_____
Laura M. Williams, Clerk to the Board

Agenda Item: VIII.C.
Meeting Date: 12/03/2018

MEMORANDUM TO BOARD OF COMMISSIONERS:

FROM: **Caroline L. Xiong, Chief Finance Officer**

DATE: **11/26/2018**

SUBJECT: **Budget Amendments**

PRESENTER: **Caroline L. Xiong**

REQUEST:
Approve the attached budget amendments and accept any grant funds awarded to the County associated with the budget amendment.

BACKGROUND:
The NC General Statutes provide for the County to make amendments to the budget during the fiscal year. The budget should be amended to reflect the changing financial opportunities and adjustments that occur after the budget is adopted. Attached are detailed explanations of each amendment and the appropriate Department Directors are here to answer any questions you may have. The amendments are:

	Department	Amount	Sources of Revenue	Justification	Journal
1.	Public Safety / EMS	$960 increase	Donations	Funds used for recognition and retention of current EMS employees	60001
2.	Day Reporting Center	$15,000 increase	Moore County Alcoholic Beverage Control Board	Alcohol Education and Rehabilitation	60002
3.	Public Safety	$35,000 increase	Emergency Management Planning Grant for 2018	Used for Emergency Management activities, exercises and supplies to strengthen overall capabilities and response to emergencies	60004

IMPLEMENTATION PLAN:
N/A

FINANCIAL IMPACT STATEMENT:
The overall effect is to increase/decrease the revenue and expenditures in the Multi-Year Grants for $50,000, Public Safety/EMS for $960, to authorize the County Manager to proceed with the amendments and any actions required as a result.

RECOMMENDATION SUMMARY:
Recommend a motion to approve the following budget amendments as stated and accept any grant funds awarded to the County associated with the budget amendment.

SUPPORTING ATTACHMENTS:
The following budget amendments and supporting information are attached:

Fiscal Year 2018/2019

	Budget Line Item Number		Budgeted Amount	Increase/ (Decrease)	Revised Budget
Public Safety/EMS - Donations					
Revenue	20018000 32502	Donations	-	960	960
Expense	20048000 52350	Recognition/Retreat	-	960	960

Approved this _____day of_____, 2018

_____

Catherine Graham
Moore County Board of Commissioners

_____

Laura Williams
Clerk to the Board

Budget Amendment Staff Report

Department: Public Safety/EMS

Increase or Decrease of Amount of Funding: $960.00 Increase in Revenue 20018000-32502 and $960.00 in Expenditure 20048000-52350

Source(s) of Funding: Donations, so far, for FY2018-2019

Justification (please be specific): Funds will be used for recognition and retention of current EMS employees.

Fiscal Year 2018/2019

	Budget Line Item Number		Budgeted Amount	Increase/ (Decrease)	Revised Budget
Day Reporting Center - Moore County Alcoholic Beverage Control Board					
Revenue	24033009 36074	ABC-Revenues	162,108	15,000	177,108
Expense	24020009 53801	ABC-Alcohol Education	175,108	15,000	190,108

Approved this _____day of_____, 2018

_____

Catherine Graham
Moore County Board of Commissioners

_____

Laura Williams
Clerk to the Board

60002

Budget Amendment Staff Report

Department:

Day Reporting Center

Increase or Decrease of Amount of Funding:

$15,000.00 increase

Source(s) of Funding:

Moore County Alcoholic Beverage Control Board

Justification (please be specific):

Received disbursement in November 2018 from the Moore County Alcoholic Beverage Control Board for $15,000.00 to be distributed to the Day Reporting Center in Fiscal Year 2018-2019 for the purpose of alcohol education and rehabilitation.

Fiscal Year 2018/2019

	Budget Line Item Number		Budgeted Amount	Increase/ (Decrease)	Revised Budget
Public Safety - Emergency Management Planning Grant for 2018					
Revenue	24032010 36076 PS194	Emergency Management Perf	-	35,000	35,000
Expense	24021010 53832 PS194	Emergency Management Perf	-	35,000	35,000

Approved this _____day of_____, 2018

_____

Catherine Graham
Moore County Board of Commissioners

_____

Laura Williams
Clerk to the Board

60004

Budget Amendment Staff Report

Department: Public Safety

Increase or Decrease of Amount of Funding: Increase Revenue by $35,000.00 in budget code 24032010-36076 PS 194 and increase Expenditure by $35,000.00 in budget code 24021010-53832 PS 194

Source(s) of Funding: Emergency Management Planning Grant for 2018

Justification (please be specific): Grant funding will be used for Emergency Management activities, exercises, and supplies to strengthen overall capabilities and response to emergencies that may happen within the county.

Agenda Item: VIII.D.
Meeting Date: 12/03/18

MEMORANDUM TO BOARD OF COMMISSIONERS:

FROM: **Caroline L. Xiong, Chief Finance Officer**

DATE: **November 26, 2018**

SUBJECT: **Digital Learning Invoices**

PRESENTER: **Caroline L. Xiong**

REQUEST:

Request the Board of Commissioners to approve the invoices for a total amount of $77,657.40 (out of state, no sales tax) submitted by Moore County School.

BACKGROUND:

During the budget process, $750,000 was allocated to Moore County School for Digital Learning, and $224,768 was carried forward from FY17/18 with a revised budget of $974,768. Currently, the available balance is $425,218.19. The Board of Commissioners requested that all invoices be approved by the Board prior to processing for payments.

IMPLEMENTATION PLAN:

Finance staff will process the payments of these invoices after the Board of Commissioners approves them.

FINANCIAL IMPACT STATEMENT:

The County has already budgeted $974,768 in the Digital Learning budget in the General Fund.

RECOMMENDATION SUMMARY:

Make a motion to approve the invoices as presented.

SUPPORTING ATTACHMENTS:

Invoice

Digital Learning 10034096 56264

Dell Financial Services™

See reverse side for important contact information.

Special Messages for MOORE COUNTY BOARD OF EDUCATION — **Invoice Number: 79703568**

Finance the total solution

At Dell Financial Services (DFS), we provide financing for Dell and non-Dell hardware, software, services and peripherals. To learn more, contact your Dell or DFS Account Manager.

Contract Summary — **Contract: 810-9000570-004**

Contract Number	Due Date	Current Charges		Past Due		Total Due
810-9000570-004	12/01/18	$77,657.40	+	$0.00	=	$77,657.40

Invoice Date	October 17, 2018	Business Segment	030066
Invoice Number	79703568	Billing Period	12/01/18-11/30/19
Contract Number	810-9000570-004	Credits/Payments received (-) *since last invoice	$0.00

001821 1/18

Credits/Payments Since Last Invoice

Contract Number	Invoice #	Description	Amount
810-9000570-004		Credits/Payments	$0.00

Summary of Current Charges

Contract Number / Product Type	Sales Order / Purchase Order #	Description	TRANSACTION Amount	Tax	Total
810-9000570-004 $1.00 PURCHASE OPTION	PO# 8585058	RENTAL	$77,657.40	$0.00	$77,657.40
		Total for 810-9000570-004	**$77,657.40**	**$0.00**	**$77,657.40**
		Invoice Total	**$77,657.40**	**$0.00**	**$77,657.40**

Detail Information

Equipment Information	Equipment Location	Transaction Description	TRANSACTION Amount	Tax	Total
PO# 8585058 MOD# 210-AHHH TAG# 262J4C2 REF# 140111334	810-9000570-004 180 PINCKNEY RD STE IT CARTHAGE, NC 28327-6004 CARTHAGE, NC 0.00%	RENTAL 12/01/18-11/30/19	$197.10	$0.00	$197.10

RECEIVED NOV 16 2018 MCS FINANCE DEPT.

JMBundy 11/16/18

RECEIVED NOV 15 2018 FINANCIAL SERVICES

Continued on next page

Please Detach Here

Please fill in the 'Amount Enclosed' and return the payment coupon with your check in the enclosed return envelope. Do not staple, paper clip, fold or tape the contents

Dell Financial Services™

Please make your check payable to: Dell Financial Services. Include your 8 digit invoice number on your check or check skirt. Ensure the 'Amount Enclosed' equals check amount. For multiple lease payments, see reverse side for instructions. Do Not combine Lease payment with any other payment

Contract Number	Invoice Number	Current Charges	Past Due Charges	Total Due	Due Date
810-9000570-004	79703568	$77,657.40	$0.00	$77,657.40	12/01/18

New Address or Phone Number? Visit us at www.dell.com/dfs or check box and complete reverse side.

☐ Address Change of Equipment Location

Amount Enclosed: $

------ manifest line ---------

MOORE COUNTY BOARD OF EDUCATION
LISA HEARN
5277 US HWY 15/501S
CARTHAGE, NC 28327

Looking for a more convenient way to pay your bill? To learn more, visit **www.dell.com/payLEASE**

DELL FINANCIAL SERVICES
PAYMENT PROCESSING CENTER
P.O. BOX 6547
CAROL STREAM, IL 60197-6547

810900057000400079703568000776574000000077657400900000 3

Agenda Item: VIII.E.
Meeting Date: December 3, 2018

MEMORANDUM TO BOARD OF COMMISSIONERS:

FROM: **Caroline Ly Xiong, Chief Finance Officer**

DATE: **11/13/18**

SUBJECT: **FY2019 JCPC Funding Plan Revision**

PRESENTER: Caroline Ly Xiong

REQUEST:
Authorize the County Finance Officer to execute Program Agreement Revisions on behalf of the County per the recommendation of the JCPC Council at their meeting on December 4th, 2018. Also authorize the Chairman, Board of County Commissioners to execute the County Funding Allocation Revision as approved by the JCPC Council at their meeting on December 4th, 2018.

BACKGROUND:
The County of Moore projects to receive $181,745 from the North Carolina Department of Public Safety, Division of Adult Correction and Juvenile Justice to fund services to youths most at risk of court involvement. North Carolina Statutes authorizes each County to create a Juvenile Crime Prevention to oversee the disbursement of these funds, as well as to monitor the recipients and to appoint its members. The Moore County Juvenile Crime Prevention Council recommended funding 2 agencies as part of the County budget process and $8,385 for JCPC Certification.

At its May 1, 2018 meeting, the Council approved the following funding:

JCPC Certification: $8,385 for Certification. This includes $4,419 for the North Moore Survey and $3,966 for JCPC administrative costs to provide a resource employee to assist with administrative support, food & provisions, office supplies, travel & transportation, communications and printing.

Moore County Youth Services: $91,070 to provide restitution, teen court and psychological evaluations components.

At its June 5, 2018 meeting the Council approved the following funding:

Moore Buddies Mentoring: $76,619 to provide mentoring and career development.

Unallocated funds: $5,671.

The JCPC will decide at their December 4, 2018 meeting on how to allocate the $5,671 unallocated funds. Any Program Agreement Revisions and County Funding Allocation Revision will need to be authorized and executed by December 31, 2018 or the County will lose the unallocated funds.

IMPLEMENTATION PLAN:
Once the funding plan revision is approved and executed then the appropriate Program Agreements Revision and funding plan revision will be forwarded to the NC Department of Public Safety, Division of Adult Correction and Juvenile Justice for its final approval.

FINANCIAL IMPACT STATEMENT:
The funding for these services is provided from the State. Local funding is provided by local cash match and local in-kind match.

RECOMMENDATION SUMMARY:
Make a motion to authorize the County Finance Officer to execute Program Agreement Revisions on behalf of the County per the recommendation of the JCPC Council at their meeting on December 4th, 2018. Also authorize the Chairman, Board of County Commissioners to execute the County Funding Allocation Revision as approved by the JCPC Council at their meeting on December 4th, 2018.

SUPPORTING ATTACHMENTS:
Original County Funding Allocation

MOORE County

NC DPS - Community Programs - County Funding Plan

Available Funds: $ $181,745 Local Match: $ $147,731 Rate: 30%

DPS JCPC funds must be committed with a Program Agreement submitted in NC Allies and electronically signed by authorized officials.

#	Program Provider	DPS-JCPC Funding	LOCAL FUNDING County Cash Match	LOCAL FUNDING Local Cash Match	LOCAL FUNDING Local In-Kind	OTHER State/ Federal	OTHER Funds	Total	% Non DPS-JCPC Program Revenues
1	Moore Youth Services	$91,070	$2,161	$250	$40,101			$133,582	32%
2	Moore Buddies Mentoring	$76,619		$36,224	$68,995			$181,838	58%
3	JCPC Certification	$8,385						$8,385	
4									
5									
6									
7									
8									
9									
10									
11									
12									
13									
14									
15									
16									
17									
18									
	TOTALS:	$176,074	$2,161	$36,474	$109,096			$323,805	46%

The above plan was derived through a planning process by the MOORE County Juvenile Crime Prevention Council and represents the County's Plan for use of these funds in FY 2018-2019.

Amount of Unallocated Funds $5,671

Amount of funds reverted back to DPS

Discretionary Funds added

check type ☐ initial plan ☐ update ☐ final

-----DPS Use Only-----

Reviewed by _____ Area Consultant _____ Date

Reviewed by _____ Program Assistant _____ Date

Verified by _____ Designated State Office Staff _____ Date

J. Renee' Brooks 6-19-18
Chairperson, Juvenile Crime Prevention Council (Date)

Catherine Graham 6/19/18
Chairperson, Board of County Commissioners or County Finance Officer (Date)

NC Department of Public Safety

Juvenile Crime Prevention Council Certification

Fiscal Year: 2018 - 2019

County: **Moore**	Date: **6/8/18**

CERTIFICATION STANDARDS

STANDARD #1 - Membership

A. Have the members of the Juvenile Crime Prevention Council been appointed by county commissioners? Yes

B. Is the membership list attached? Yes

C. Are members appointed for two year terms and are those terms staggered? Yes

D. Is membership reflective of social-economic and racial diversity of the community? Yes

E. Does the membership of the Juvenile Crime Prevention Council reflect the required positions as provided by N.C.G.S. §143B-846? No

If not, which positions are vacant and why?

School Superintendent or designee, Member of Faith Community, Member of Business Community, two members under the age of 18, Juvenile Defense Attorney, Rep. United Way/other non-profit, Representative/Parks and Rec, and 1 county commissioner appointee. The Council is pursuing the membership of these required positions.

STANDARD #2 - Organization

A. Does the JCPC have written Bylaws? Yes

B. Bylaws are ☐ attached or ☒ on file (Select one.)

C. Bylaws contain Conflict of Interest section per JCPC policy and procedure. Yes

D. Does the JCPC have written policies and procedures for funding and review? Yes

E. These policies and procedures ☐ attached or ☒ on file. (Select one.)

F. Does the JCPC have officers and are they elected annually? Yes

JCPC has: ☒ Chair; ☒ Vice-Chair; ☐ Secretary; ☐ Treasurer.

STANDARD #3 - Meetings

A. JCPC meetings are considered open and public notice of meetings is provided. Yes

B. Is a quorum defined as the majority of membership and required to be present in order to conduct business at JCPC meetings? Yes

C. Does the JCPC meet bi-monthly at a minimum? Yes

D. Are minutes taken at all official meetings? Yes

E. Are minutes distributed prior to or during subsequent meetings? Yes

STANDARD #4 - Planning

A. Does the JCPC conduct an annual planning process which includes a needs assessment, monitoring of programs and funding allocation process? Yes

B. Is this Annual Plan presented to the Board of County Commissioners and to DPS? Yes

C. Is the Funding Plan approved by the full council and submitted to Commissioners Yes

for their approval?

STANDARD #5 - Public Awareness

A. Does the JCPC communicate the availability of funds to all public and private non-profit agencies which serve children or their families and to other interested community members? (☒ RFP, distribution list, and article attached) — Yes

B. Does the JCPC complete an annual needs assessment and make that information available to agencies which serve children or their families, and to interested community members? — Yes

STANDARD #6 – No Overdue Tax Debt

A. As recipient of the county DPS JCPC allocation, does the County certify that it has no overdue tax debts, as defined by N.C.G.S. §105-243.1, at the Federal, State, or local level? — Yes

Briefly outline the plan for correcting any areas of standards non-compliance.

Having complied with the Standards as documented herein, the Juvenile Crime Prevention Council may use up to $15,500 of its annual Juvenile Crime Prevention fund allocation to cover administrative and related costs of the council. *Form JCPC/ OP 002 (b) JCPC Certification Budget Pages* detailing the expenditure budget must be attached to this certification.
The JCPC Certification **must be received by June 30, 2018.**

JCPC Administrative Funds
SOURCES OF REVENUE

DPS JCPC Only list requested funds for JCPC Administrative Budget.	8,385
Local	
Other	
Total	8,385

Renee Brooks — 6-19-18
JCPC Chairperson — Date

Catherine Graham — 6/19/18
Chairman, Board of County Commissioners — Date

DPS Designated Official — Date

Juvenile Crime Prevention Council Certification (cont'd)

Moore **County** **FY** 2018-2019

Instructions: N.C.G.S. § 143B-846 specifies suggested members be appointed by county commissioners to serve on local Juvenile Crime Prevention Councils. In certain categories, a designee may be appointed to serve. Please indicate the person appointed to serve in each category and his/her title. Indicate appointed members who are designees for named positions. Indicate race and gender for all appointments.

Specified Members	Name	Title	Designee	Race	Gender
1) School Superintendent or designee			☐		
2) Chief of Police	Jason Blackburn	Carthage Police Dept	☒	C	M
3) Local Sheriff or designee	Patrick Holder	Lieutenant	☒	C	M
4) District Attorney or designee	Tiffany Bartholomew	Assistant DA	☒	C	F
5) Chief Court Counselor or designee	David Wall	Chief Court Counselor	☐	AA	M
6) Director, AMH/DD/SA, or designee	Mary Spell	Moore Access	☒	AA	F
7) Director DSS or designee	Melvin Thorne	Social Worker	☒	C	M
8) County Manager or designee	Caroline Xiong	CFO	☒	A	F
9) Substance Abuse Professional	Gene McRae	Director of Customer Service, Sandhills Center		C	M
10) Member of Faith Community					
11) County Commissioner	Catherine Graham	County Commissioner		C	F
12) Two Persons under age 18 (State Youth Council Representative, if available)					
13) Juvenile Defense Attorney					
14) Chief District Judge or designee	Skipper Creed	Judge	☒	C	M
15) Member of Business Community					
16) Local Health Director or designee	Matt Garner	Health Educator and Public Information Officer	☒	C	M
17) Rep. United Way/other non-profit					
18) Representative/Parks and Rec.					
19) County Commissioner appointee	Renee' Brooks	Assistant Clerk to Superior Court, Juvenile Division		C	F
20) County Commissioner appointee	April Ferrell	GAL Program Supervisor		C	F
21) County Commissioner appointee	Laura May	Friend to Friend		C	F

Juvenile Crime Prevention Council Certification (cont'd)

22) County Commissioner appointee	Annette McGraw	Paralegal		C	F
23) County Commissioner appointee	Buddy Howell	Retired - Federal OJJDP		C	M
24) County Commissioner appointee	Shirlyn Morrison-Sims	Sandhills - Young Families Support Advocate		AA	F
25) County Commissioner appointee					

SECTION VII

JCPC Certification Budget Pages

Program: County Juvenile Crime Prevention Council

Fiscal Year 2018-2019 **Number of months** 12

	Cash	In-Kind	Total
I. Personnel Services	$2,326		$2,326
120 Salaries & Wages	$2,160		$2,160
180 Fringe Benefits	$166		$166
190 Professional Services			
II. Supplies & Materials	$990		$990
210 Household & Cleaning			
220 Food & Provisions	$240		$240
230 Education & Medical			
240 Construction & Repair			
250 Vehicle Supplies & Materials			
260 Office Supplies & Materials	$750		$750
280 Heating & Utility Supplies			
290 Other Supplies & Materials			
III. Current Obligations & Services	$5,069		$5,069
310 Travel & Transportation	$216		$216
320 Communications	$300		$300
330 Utilities			
340 Printing & Binding	$134		$134
350 Repairs & Maintenance			
370 Advertising			
380 Data Processing			
390 Other Services	$4,419		$4,419
IV. Fixed Charges & Other Expenses			
410 Rental of Real Property			
430 Equipment Rental			
440 Services & Maint. Contracts			
450 Insurance & Bonding			
490 Other Fixed Charges			
V. Capital Outlay			
510 Office Furniture & Equipment			
530 Educational Equipment			
540 Motor Vehicle			
550 Other Equipment			
580 Buildings, Structures & Improv.			
Total	$8,385		$8,385

SECTION VI (1)

BUDGET NARRATIVE

County Juvenile Crime Prevention Council FY 2018-2019

Provide justification of each line item entry in the Line Item Budget section.

Item #	Justification	Expense	Indicate In-Kind items by YES In-Kind?
120	Personnel: JCPC Administrative Support position: (12 months at 12 hours per month = 144 hours; 144 hours at $15 per hour = $2,160)	$2,160	
180	FICA and Medicare (7.65% x $2,160 = $165.24 or $166	$166	
220	Food & Provisions: $30 at 8 meetings a year	$240	
260	Office Supplies: Software licenses for laptop (Word, Excel, Powerpoint, Notebook) -$150, Windows 10 Pro - $200	$350	
260	Office Supplies: Paper, pens, notebooks for Council members	$400	
310	Travel and Transportation: Milelage reimbursement 50 miles X 8 meetings - 400 miles at .54 per mile	$216	
320	Communications: $25 per month reimbursement for phone and internet access	$300	
340	Printing: Copies of minutes, agendas, handouts for JCPC meetings and subcommittee meetings	$134	
390	Contract with Community Presbyterian Church to conduct a community survey in the North Moore area.	$4,419	
	TOTAL	$8,385	

Section VI (2)

For each employee list the following information

Job Title	Annual or Hourly Wage	Months of Employment
Resource Worker for Administrative Support of JCPC	$2,160	12

Agenda Item: VIII.F.
Meeting Date: 12/3/18

MEMORANDUM TO BOARD OF COMMISSIONERS:

FROM: **Randy Gould, Public Works Director**

DATE: **December 3, 2018**

SUBJECT: **Resolution Authorizing the Upset Bid Process for "Seven Lakes South Well Site", LRK#00026840**

REQUEST:
Adopt a resolution accepting the negotiated offer of $6,000.00 for certain real property known as "Seven Lakes South Well Site" and authorizing the upset bid process.

BACKGROUND:
On October 1, 1999, certain real property known as "Seven Lakes South Well Site," LRK#00026840, which is located at 156 Patterson Lane, West End and also known as Well Site 7 was acquired by Moore County from Moore Water and Sewer Authority. This was an existing well that was previously used and has now been properly abandoned.

On November 19, 2018, an offer to purchase "Seven Lakes South Well Site" was received from Mr. Otis Wayne Kennedy. The offer was in the amount of $6,000.00. Mr Kennedy deposited the required amount of 5% down in the amount of $300.00.

IMPLEMENTATION PLAN:
After adopting the Resolution, the County will begin the upset bid process. The Clerk to the Board will advertise the negotiated offer and upset bid process. The bid process will continue until a 10-day period has passed without any qualifying upset bid having been received. At that time, the amount of the final high bid will be reported to the Board of Commissioners. Closing on the sale of the property will occur within 60 days of approval of the final high offer.

FINANCIAL IMPACT STATEMENT:
Selling the property will generate future property tax revenue for the County.

RECOMMENDATION SUMMARY:
Make a motion to adopt the attached resolution acknowledging receipt of the offer of $6,000.00 and authorize the upset bid process, and authorize the Chairman to sign all necessary documents.

SUPPORTING ATTACHMENTS:
1. Resolution Authorizing the Upset Bid Process for "Seven Lakes South Well Site"
2. Map of Property
3. Public Notice

RESOLUTION AUTHORIZING THE UPSET BID PROCESS FOR "SEVEN LAKES SOUTH WELL SITE", LRK#00026840

WHEREAS, the County of Moore owns certain real property located at 156 Patterson Lane, West End, Moore County, North Carolina, being known and more particularly described as "SEVEN LAKES SOUTH WELL SITE," LRK#00026840; and

WHEREAS, as part of the transaction, the purchaser will be required to hold the County harmless against any and all claims or damages that may arise as the result of acquiring or owning the property; and

WHEREAS, North Carolina General Statute 160A-269 permits the County to sell real property by negotiated offer and upset bid; and

WHEREAS, the Board of Commissioners acknowledges receipt of an offer from Mr. Otis Wayne Kennedy in the amount of $6,000.00 for the property described above; and

WHEREAS, Mr. Kennedy has paid the required five percent deposit on his offer.

NOW, THEREFORE, the Board of Commissioners of the County of Moore resolves that:

1. The Board of Commissioners authorizes sale of the property described above through the upset bid procedure of North Carolina General Statute 160A-269; and

2. The Clerk to the Board shall cause a notice of the proposed sale to be published. The notice shall describe the property and the amount of the offer, and shall state the terms under which the offer may be upset; and

3. Any person may submit an upset bid to the office of the Clerk to the Board within 10 days after the notice of sale is published. In order for a bid to be considered, the bidder must be current on payment of all property taxes owed to the County; and

4. If a qualifying higher bid is received, the Clerk to the Board shall cause a new notice of upset bid to be published, and shall continue to do so until a 10-day period has passed without any qualifying upset bid having been received. At that time, the amount of the final high bid shall be reported to the Board of Commissioners; and

5. A qualifying higher bid is one that raises the existing offer by not less than ten percent (10%) of the first $1,000.00 of that offer and five percent (5%) of the remainder of that offer; and

6. A qualifying higher bid must also be accompanied by a deposit in the amount of five percent (5%) of the bid; the deposit may be made in cash, cashier's check, or certified check. The County will return the deposit on any bid not accepted, and will return the

deposit on an offer subject to upset if a qualifying higher bid is received. The County will return the deposit of the final high bidder at closing if requested; and

7. The terms of the final sale are:

    - The property is sold in its current condition, as is, and the County gives no warranty with respect to usability of the property; and
    - The County must approve the final high bid before the sale is closed; and
    - Closing will occur within 60 days of approval of the final bid at the Office of the Moore County Attorney; and
    - The County will issue a non-warranty deed; and
    - The Buyer is responsible for ad valorem taxes for the current year (non-prorated); and
    - The Buyer must pay with cash, by cashier's check or by certified check at the time of the closing.

8. The County reserves the right to withdraw the property from sale at any time before the final high bid is approved and the right to reject at any time all bids; and

9. If no qualifying upset bid is received then the initial bid is approved as the final bid and the sale of the property is authorized for the amount of the initial bid, and the Chairman is authorized to execute the deed and transfer title to the purchaser.

ADOPTED this 3rd day of December 2018 by the Moore County Board of Commissioners.

COUNTY OF MOORE

_____

Catherine Graham, Chairman
Moore County Board of Commissioners

ATTEST:

_____

Laura M. Williams, Clerk to the Board

CONNECTGIS WEB HOSTING

Moore_mgd
Printed May 31, 2018
See Below for Disclaimer

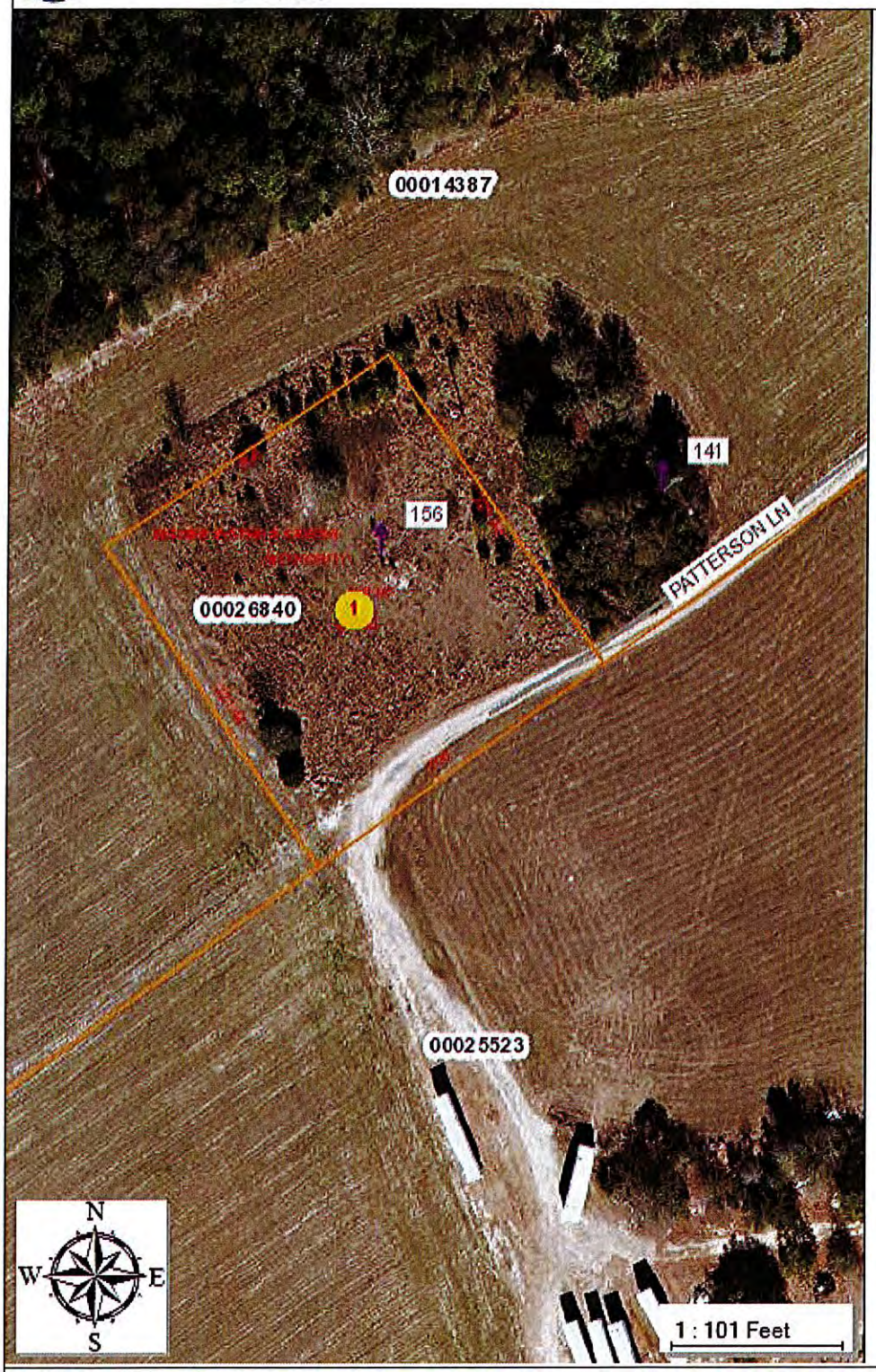

Address
Parcels
County
Streets
Highways
Lakes and Rivers

GIS DISCLAIMER All the information contained on this media is prepared for the inventory of real property found within Moore County. All data is compiled from recorded deeds, plats, and other public records and data. Users of this data are hereby notified that the aforementioned public primary information sources should be consulted for verification of the information. All information contained herein was created for the County's internal use. Moore County, its agents and employees make NO warranty as to the correctness or accuracy of the information set forth on this media whether express or implied, in fact or in law, including without limitation the implied warranties of merchantability and fitness for a particular use. Any resale of this data is strictly prohibited in accordance with North Carolina General Statute 132-10. Grid is based on North Carolina State Plane Coordinate System NAD83 (feet).

PUBLIC NOTICE
SALE OF COUNTY PROPERTY

An offer of $6,000.00 has been submitted for the purchase of certain property owned by the County of Moore known as "SEVEN LAKES SOUTH WELL SITE," LRK#00026840, which is located at 156 Patterson Lane, West End, Moore County, North Carolina, and more particularly described as "SEVEN LAKES UTILITIES WELL NO. 7" as follows:

> Beginning at a stake in the south line of the 33½ acre tract, described in deed recorded in Book 464, page 313, More County Registry, said stake being S. 54* 01'29"W 446.84 ft. from the southeastern corner of said 33½ acre tract, running thence with the south line of said 33½ acre tract S. 54* 01'29"W 200 feet to a stake; thence W. 35*58'31"W. 221.44 feet to a stake; thence W. 54*01'29*E 200 feet to a stake; thence S. 35*58'31*E 221.44 feet to the beginning, containing 1.02 acres, more or less, and being the tract designated "Well Site", shown on the certain map made by Central Carolina Surveyors, P. A., dated December 7, 1982.
>
> Also included in this conveyance is an easement for ingress and egress to and from the Southern Railroad right of way and to and from the above tract, being 20 feet in width and running the entire length of the southern line of 33½ acres described in Deed Book 464, page 313, to wit: S. 54* 01'29" W. 2428.53 feet. There is also included within the aforesaid access easement, an easement 10' in width, parallel on the south line of said access easement for installation, maintenance and repair of a water line, running from the southwest corner of the 1.02 acre tract above described 1,781.64, to the Otis Puckett corner described in Deed Book 148, page 422, and continuing from Puckett's corner W.86*50'45"W 215.92 feet to Longleaf Road. For further reference see Deed Book 495, page 432, Moore County Registry.

As part of the transaction, the purchaser will be required to hold the County harmless against any and all claims or damages that may arise as the result of acquiring or owning the property.

Persons wishing to upset the offer that has been received shall submit a bid with their offer to the office of the Clerk to the Board, 1 Courthouse Square, Carthage, NC 28327, by 5:00 P.M., Monday, December 17, 2018. At that time the clerk to the board shall review the bids, if any, and the highest qualifying bid will become the new offer. If there is more than one bid in the highest amount, the first such bid received will become the new offer.

A qualifying higher bid is one that raises the existing offer to an amount not less than $6,350.00. In order for a bid to be considered, the bidder must be current on payment of all property taxes owed to the County.

A qualifying higher bid must be accompanied by a deposit in the amount of five percent (5%) of the bid. The deposit must be made in cash, by cashier's check, or by certified check. The County will return the deposit on any bid not accepted, and will return the deposit on an offer subject to upset if a qualifying higher bid is received. If the final high bidder refuses at any time to close sale, their deposit will be forfeited to the County.

The process of advertising and accepting upset bids will continue until a 10-day period has passed without any qualifying upset bid having been received. At that time, the amount of the final high bid will be reported to the Board of Commissioners.

The County Board of Commissioners must approve the final high offer before the sale is closed, which it will do within 60 days after the final upset bid period has passed. The County reserves the right to reject any and all bids at any time.

The buyer must pay with cash, by cashier's check, or by certified check at closing.

Inquiries about the property and the sale may be made to the Clerk to the Board, 1 Courthouse Square, Carthage, NC, or at telephone (910) 947-4006 during normal business hours.

Agenda Item: VIII.G.
Meeting Date: **10/03/18**

MEMORANDUM TO BOARD OF COMMISSIONERS:

FROM: **Randy Gould, Public Works Director**

DATE: **November 21, 2018**

SUBJECT: **Deed of Dedication for Winston Pines**

PRESENTER: **Randy Gould, PE**

REQUEST:
Make a motion to accept the Deed of Dedication for Winston Pines development.

BACKGROUND:
The utilities construction for Winston Pines development is completed and ready for operation and acceptance by the County.

IMPLEMENTATION PLAN:
Accept the deed of dedication for the utilities and begin operation of the system.

FINANCIAL IMPACT STATEMENT:
Any acceptance of ownership that places additional financial burden on Moore County Public Utilities will be covered by the utility ratepayers.

RECOMMENDATION SUMMARY:
Make a motion to accept the Deed of Dedication for Winston Pines development.

SUPPORTING ATTACHMENTS:
Deed of Dedication.

DEED OF DEDICATION AND EASEMENT

This instrument prepared by: Elizabeth Curran O'Brien, Attorney
Return to: Moore County Attorney's Office, P.O. Box 905, Carthage, NC 28327

THIS DEED OF DEDICATION is made the ____ day of _____, 20____, by and between:

GRANTOR	**GRANTEE**
Bass Design and Development, LLC 120 Chesterfield Drive Pinehurst, NC 28374	**COUNTY OF MOORE**, a political subdivision of the State of North Carolina 1 Courthouse Square P.O. Box 905 Carthage, NC 28327

WITNESSETH:

WHEREAS, Grantor is the owner and developer of a tract or parcel located in the __Mineral Springs___ Township, Moore County, North Carolina, known as "___Winston Pines Subdivision__" (the "Property"); and

WHEREAS, Grantor has caused to be installed water and/or sewer utility lines and equipment under or across a portion of the Property; and

WHEREAS, Grantor wishes to obtain water and/or sewer service from Grantee for the Property; and

WHEREAS, Grantee has adopted a policy regarding water distribution systems and sewer collection systems under the terms of which includes that in order to obtain water and/or sewer service for the Property, Grantor must convey title to the water distribution system and/or sewer collection systems and all necessary easements to Grantee through an instrument acceptable to Grantee; and

NOW, **THEREFORE**, Grantor, in consideration of Grantee accepting said water and/or sewer collection systems and making water and/or sewer service available to the Property, does hereby convey to Grantee, its lawful successors and assigns, the following described property:

All water and/or sewer mains, equipment, and apparatuses used in the water distribution system and/or sewer collection system that is/are constructed upon the Property (the "Facilities"), which is/are located within the 60 foot right of way more fully depicted in the plat recorded at Plat Cabinet 17, Slide 930, and which is hereby incorporated by reference as if fully set forth herein.

A perpetual and non-exclusive easement under, along, and upon the entire area of the roads, streets and cul-de-sac rights-of-ways as depicted in the plat recorded at Plat Cabinet 17, Slide 930 (the "Easement Area").

TO HAVE AND TO HOLD said property and easement above described together with the privileges and appurtenances thereto belonging to Grantee forever.

The Grantee shall have the right to construct, install, reconstruct, operate, maintain, inspect, repair, relocate, modify, and remove water distribution and/or wastewater collection pipeline, apparatus, and equipment within the Easement Area. The easement granted to the Grantee includes the following rights: 1) ingress and egress over the Easement Area and over adjoining portions of the Property (using lanes, driveways, and paved areas where practical, as determined by the Grantee); 2) to relocate the Facilities and Easement Area on the Property to conform to any future highway or street relocation, widening, or improvement; 3) to keep clear from the Easement Area, now or at any time in the future, trees, shrubs, undergrowth, buildings, structures (e.g. docks or retaining walls), and obstructions (e.g. fences or paved areas); and 4) all other rights and privileges reasonably necessary or convenient for the Grantee's safe, reliable, and efficient installation, operation, and maintenance of the Facilities and for the enjoyment and use of the Easement Area for the purposes described herein. Grantee will not be responsible for the costs, repair, or replacement of plants, buildings, structures, or obstructions located within the Easement Area, including those that may occur as a result of the Grantee's use of the easement.

Grantor will not place shrubs, structures (e.g. docks or retaining walls), or obstructions (e.g. fences or paved areas) within the easement area without the express written consent of the Grantee. Grantor will not place trees or buildings within the easement area.

Furthermore, Grantor does hereby covenant that it is seized of said real property and personal property described above in fee simple and has the right to convey the same in fee simple, that the same are free and clear of encumbrances, and that it will warrant and defend the title to the same against all persons whomsoever.

Grantor agrees and understands that Grantee conditionally accepts the personal property and easement being dedicated by Grantor. Grantor is responsible for maintaining the personal property for one year beginning _____, 20____. Grantee will have until _____, 20____, to inspect the personal property and easement for any needed repairs. Grantor will be provided with a list of items that must be resolved prior to the Grantee's final acceptance of the personal property and easement. If Grantor fails to resolve the items as required by Grantee, then Grantee may, in its sole discretion, revoke this Deed of Dedication and Easement.

[Intentionally left blank. Signatures on the following page.]

IN WITNESS WHEREOF, the Grantor has caused this instrument to be duly executed as of the day and year first written above.

GRANTOR

_____

By: _____(Print)

STATE OF NORTH CAROLINA

COUNTY OF MOORE

I, a Notary Public of the County and State aforesaid, do hereby certify that _____ personally came before me this day, and I have seen satisfactory evidence of the principal's identity, by a current state or federal identification with the principal's photograph in the form of a _____; and he/she has acknowledged that he/she is the Organizer of _____, a North Carolina _____ company, and that he/she, as Organizer, being authorized to do so, executed the foregoing on behalf of _____.

Witness my hand and official seal, this ____ day of _____, 20____.

_____

Signature of Notary Public

(NOTARY SEAL)

_____

Printed Name of Notary Public

My Commission Expires: _____

ACCEPTANCE OF DEED

This Deed of Dedication and accompanying Affidavit was accepted by the Moore County Board of Commissioners on the ____ day of _____, 20____.

COUNTY OF MOORE

_____

_____, Chair

Moore County Board of Commissioners

ATTEST:

_____

Laura M. Williams

Clerk to the Board

STATE OF NORTH CAROLINA **AFFIDAVIT**

COUNTY OF MOORE

_Bass Design and Development, LLC__, a North Carolina _____LLC_____ (LLC, Inc., etc.), with an office and place of business located at ___120 Chesterfield Dr, Pinehurst NC 28374___ and conducting business in Moore County, North Carolina (the "Affiant), being first duly sworn, hereby deposes and says under oath as follows:

1. That it is the owner of certain property located in _Mineral Springs_ Township, Moore County, North Carolina, known as "_Winston Pines Subdivision_," containing lots numbered _1_ through _28_, as more particularly described in a Deed of Dedication in favor of the County of Moore of even date herewith.

2. That it has caused to be installed water and/or sewer mains under and along the road right-of-ways for the property hereinafter described and referenced:

   > All water and/or sewer mains, equipment, and apparatuses used in the water distribution system and/or sewer collection system that is/are constructed upon the Property (the "Facilities"), which is/are located within the 60 foot right of way more fully depicted in the plat recorded at Plat Cabinet 17, Slide 930, and which is hereby incorporated by reference as if fully set forth herein.

3. All the work which has been performed in the construction and installation of said water and/or sewer mains described in paragraph 2, above, has been fully paid for and there are now no liens of any kind, including any lien for labor or material, against the subdivision property, which would in any way jeopardize title of Affiant to the property in said subdivision nor are there any legal actions pending against Affiant or any contractor arising out of any work performed in said subdivision or the water and/or sewer mains installed therein which would in any way jeopardize title to the subdivision or the water and/or sewer mains located therein.

[Intentionally left blank. Signature on the following page.]

IN WITNESS WHEREOF, the Affiant has caused this instrument to be duly executed by its authorized officer, this the _____ day of _____, 20___.

GRANTOR

_____

By: _____(Print)

STATE OF NORTH CAROLINA

COUNTY OF MOORE

I, a Notary Public of the County and State aforesaid, do hereby certify that _____ personally came before me this day, and I have seen satisfactory evidence of the principal's identity, by a current state or federal identification with the principal's photograph in the form of a _____; and he/she has acknowledged that he/she is the Organizer of _____, a North Carolina _____ company, and that he/she, as Organizer, being authorized to do so, executed the foregoing on behalf of _____.

Witness my hand and official seal, this ____ day of _____, 20____.

_____

Signature of Notary Public

(NOTARY SEAL)

_____

Printed Name of Notary Public

My Commission Expires: _____

DEVELOPER RELEASE AND WAIVER OF ALL CLAIMS AND LIENS

The County of Moore (the "County") is willing to accept a Deed of Dedication of water and/or sewer mains and easement access to the water and/or sewer mains from _Bass Design and Development, LLC_ (the "Developer"), as described in the Deed of Dedication and Easement executed by the Developer on _Winston Pines Subdivision_. In exchange for the acceptance and operation of the water distribution system and/or sewer collection system, the Developer executes this Release and Waiver of All Claims and Liens.

The Deed of Dedication from the Developer to the County is for the following property:

> All water and/or sewer mains, equipment, and apparatuses used in the water distribution system and/or sewer collection system that is/are constructed upon the Property (the "Facilities"), which is/are located within the 60 foot right of way more fully depicted in the plat recorded at Plat Cabinet 17, Slide 930, and which is hereby incorporated by reference as if fully set forth herein. A perpetual and exclusive easement that is 60 feet in total width, 60 feet in width on both and all sides of the constructed and installed equipment and water and/or sewer mains as the same are located over, upon and under the real property more further described in the plats recorded at Plat Cabinet 17, Slide(s) 930.

The property described above, which includes, but is not limited to, all water and/or sewer mains, equipment and apparatuses shall hereinafter be referred to as the "Property."

The Developer agrees for itself, its assigns, heirs, contractors, vendors, suppliers, materialmen, laborers and other persons or entities providing services, labor, parts or materials, that there are no claims, demands or liens existing, pending or threatened against the Property. Further, the Developer agrees that all invoices, including purchases, supplies, parts and labor concerning the Property have been paid in full.

For and in consideration of the County's acceptance of the Property and the County's agreement to operate the water distribution system and/or sewer collection system, the Developer, for itself and its assigns, heirs, subcontractors, vendors, suppliers, materialmen, laborers and other persons or entities providing services, labor, parts or materials, hereby releases and forever discharges the County, its agents, affiliates, representatives, officers, directors, attorneys and employees from any and all claims, demands or causes of action that might exist, arise out of, or in any way be related to the Property as of the date this release is executed.

To the fullest extent permitted by law and regulation, the Developer agrees to indemnify and hold harmless the County and its officials, agents, and employees from and against any and all claims, damages, losses and expenses, direct, indirect or consequential (including but not limited to fees and charges of engineers or architects, subcontractors, attorneys and other professionals and costs related to court action or arbitration) arising out of or resulting from the Property or from the Property being transferred to the County.

In addition to this Release and Waiver of All Claims and Liens, in exchange for the County accepting the water and/or sewer mains, the Developer will provide the County with a one-year warranty on labor and repair of the water and/or sewer mains, equipment and apparatuses.

IN WITNESS WHEREOF, this Release and Waiver has been executed this ____ day of _____, 20____.

DEVELOPER	**ATTEST:**
_____	_____
By: _____ (Print)	By: _____ (Print)

CONTRACTOR RELEASE AND WAIVER OF ALL CLAIMS AND LIENS

The County of Moore (the "County") is willing to accept a Deed of Dedication of water and/or sewer mains and easement access to the water and/or sewer mains from __Bass Design & Development, LLC_ (the "Developer"), as described in the Deed of Dedication executed by the Developer on _Winston Pines Subdivision_. In exchange for the acceptance and operation of the water distribution system and/or sewer collection system, the Developer's Contractor, _G.W.B. Construction, LLC_, a North Carolina ___LLC_____ (Inc., LLC, etc.) executes this Release and Waiver of All Claims and Liens.

The Deed of Dedication from the Developer to the County is for the following property:

> All water and/or sewer mains, equipment, and apparatuses used in the water distribution system and/or sewer collection system that is/are constructed upon the Property (the "Facilities"), which is/are located within the 60 foot right of way more fully depicted in the plat recorded at Plat Cabinet 17, Slide 930, and which is hereby incorporated by reference as if fully set forth herein. A perpetual and exclusive easement that is 60 feet in total width, 60 feet in width on both and all sides of the constructed and installed equipment and water and/or sewer mains as the same are located over, upon and under the real property more further described in the plats recorded at Plat Cabinet 17, Slide(s) 930.

The property described above, which includes, but is not limited to, all water and/or sewer mains, equipment and apparatuses shall hereinafter be referred to as the "Property."

The Contractor agrees for itself, assigns, heirs, subcontractors, vendors, suppliers, materialmen, laborers and other persons or entities providing services, labor, parts or materials that there are no claims, demands or liens existing, pending or threatened against the Property. Further, the Contractor agrees that all invoices, including purchases, supplies, parts and labor concerning the Property have been paid in full.

For and in consideration of the County's acceptance of the Property, and the County's agreement to operate the water distribution system and/or the sewer collection system, the Contractor agrees for itself, assigns, heirs, subcontractors, vendors, suppliers, materialmen, laborers and other persons or entities providing services, labor, parts or materials, hereby releases and forever discharges the County, its agents, affiliates, representatives, officers, directors, attorneys and employees from any and all claims, demands or causes of action that the Contractor has or might have arising out of or in any way related to the Property and has submitted this separate Release and Lien Waiver forever releasing the County from and against any and all claims, liens, demands, judgments or suits at law and equity, in connection with or related to the Property, effective as of the date this release is executed.

To the fullest extent permitted by laws and regulations, the Contractor agrees to indemnify and hold harmless the County and its officials, agents, and employees from and against all claims,

damages, losses, and expenses, direct, indirect or consequential (including but not limited to fees and charges of engineers or architects, subcontractors, attorneys and other professionals and costs related to court action or arbitration) arising out of or resulting from the Property or from the Property being transferred to the County.

In addition to this Release and Waiver of All Claims and Liens, in exchange for the County accepting the water and/or sewer mains, the Contractor will provide the County with a one-year warranty on labor and repair of the water and/or sewer mains, equipment and apparatuses.

IN WITNESS WHEREOF, this Release and Waiver has been executed this ____ day of _____, 20____.

CONTRACTOR	**ATTEST:**
_____	_____
By: _____ (Print)	By: _____ (Print)

VIII.H.

Agenda Item: November 28th, 2018
Meeting Date: December 3rd , 2018

MEMORANDUM TO BOARD OF COMMISSIONERS:

FROM: Sheriff Neil Godfrey

DATE: November 21, 2018

SUBJECT: Sheriff Fee for Deputy Off Duty Holiday Pay

REQUEST:

We are requesting that the Board of Commissioners approve the fee charged for deputies to work off-duty on Holidays to $70.00 per hour.

BACKGROUND:

The Moore County Sheriff's Office receives numerous requests from businesses for deputies to provide security for a variety of events. In September of 2015, we began contract this type of work with the county for liability issues. The attached contract charges business $50.00 per hour for this work. The deputy is paid $37.50 per hour and the remainder is used to pay the County's portion of the deputy's benefits including FICA, Retirement, 401-K and Life Insurance.

The contract charges businesses $70.00 per hour for deputies working off-duty assignments on holidays. We omitted this fee from our fee schedule and simply need to update our fee schedule. Deputies are paid $55.00 per hour for this work and the remainder is used to pay the County's portion of the deputy's benefits.

IMPLEMENTATION PLAN:

Businesses will be charged in compliance with the contract and the Sheriff's Fee Schedule.

FINANCIAL IMPACT STATEMENT:

There is no additional cost to the County for updating the Sheriff's Fee Schedule for FY2019.

RECOMMENDATION SUMMARY:

Sheriff Godfrey recommends that Sheriff's fee schedule be updated to include this additional fee.

Motion to approve the Sheriff's Fee Schedule.

SUPPORTING ATTACHMENTS:

1. Copy of the proposed contract for Off Duty Work.
2. Copy of the Sheriff's Fee Schedule.

Moore County Sheriff's Office
SECONDARY EMPLOYMENT AGREEMENT

THIS SECONDARY EMPLOYMENT AGREEMENT (this "Agreement") is entered into the _____ day of _____, 20____, by and between _____, a (circle one: sole proprietor / corporation / LLC / Other: _____) (the "Secondary Employer") and the County of Moore, through the Moore County Sheriff's Office, a subdivision of the State of North Carolina.

A. NOTICE TO EMPLOYERS

1. Off-duty deputies are subject to the policies and procedures of the Moore County Sheriff's Office. The Secondary Employer has no authority over a deputy and is restricted to providing only a general assignment of duties to be performed by a deputy.

2. **The duties of a deputy are limited to those of a law enforcement nature. Deputies cannot enforce the rules and regulations of the Secondary Employer that are not a violation of law.** For example, deputies will not regulate entry into a facility or venue by checking identification or entry tickets, operating metal detectors, or performing searches of people coming into a business or event.

3. Deputies do not have the same authority over private property that the Secondary Employer or the Secondary Employer's other employees have. A deputy's actions are limited to a breach of the peace or violation of law. For example, deputies will not question persons about the validity of their presence within a business or venue, or ask persons to leave a business or venue without an employee being present that has already asked the person to leave.

4. Deputies will not perform a record check of any individual unless that record check is designed to uncover a violation of law.

5. Deputies will not initiate or otherwise authorize the towing of any vehicle from private property unless the vehicle is perceived to be more likely than not stolen.

6. The Secondary Employer is responsible for maintaining records of each deputy's hours and will make those records available for review by representatives of the Moore County Sheriff's Office during business hours.

7. A representative of the Moore County Sheriff's Office will make periodic inspections of secondary employment jobs. If any job is discovered to be using deputies for duties not of a law enforcement nature, the permit for that job will be suspended immediately and deputies will no longer be able to be employed by that employer.

Any deviation from the restrictions imposed above must be outlined in writing and formally approved in writing by the Sheriff.

B. COMPENSATION.

The compensation rates are as follows:

1. $50.00 per hour per deputy
2. $70.00 per hour per deputy on County observed holidays. Holidays include:

    a. New Year's Day;
    b. Memorial Day;
    c. Independence Day;
    d. Thanksgiving Day;
    e. Christmas Eve;
    f. Christmas Day; and
    g. New Year's Eve.

Deputies will be paid at the appropriate rate for a minimum of two hours, even if the job is less than two hours. A partial hour will be paid as a full hour.

C. PAYMENT.

Prior to the date of work, the Secondary Employer will pay to the Sheriff's Office the amount due, which is calculated by the Sheriff's Office using the information provided by the Secondary Employer within the Secondary Employment Application (*See* Attachment 1). If the job is shorter or longer than provided for in the Secondary Employment Application, the appropriate adjustment will be made to the amount due, resulting in the Sherriff's Office either issuing an invoice or a reimbursement to the Secondary Employer.

D. SHERIFF'S OFFICE VEHICLES.

Deputies are required to drive a marked or unmarked Moore County Sheriff's Office vehicle to secondary employment jobs unless otherwise approved by the Sheriff. There is no additional charge for the deputy's use of the vehicle.

E. STAFFING REQUIRMENTS.

The Sheriff, or designee, will review Secondary Employment Applications (*See* Attachment 1) and provide input to determine the correct staffing levels. Staffing levels are based upon a variety of factors, which include, but are not limited to:

1. Estimated attendance;
2. Sale or consumption of alcoholic beverages on the premises;
3. Previous event history;
4. Physical layout of the site;
5. Traffic or parking issues; and
6. General crime trends in the vicinity.

F. PROCEDURE FOR REQUESTING OFF-DUTY DEPUTIES

The Secondary Employer cannot retain the services of off-duty deputies of the Moore County Sheriff's Office until such time as this Agreement is received and approved by the Sheriff, or designee. Once this Agreement has been approved, the Secondary Employer will be notified. Agreements with the Secondary Employer's original signature are accepted by mail or in person (during normal business hours) at the address provided below.

Once this Agreement is effective, to request a deputy(ies) for an off-duty assignment, a Secondary Employment Application (*See* Attachment 1) must be submitted no less than five days prior to any job. Applications are accepted by mail, fax, e-mail, or in person (during normal business hours) at the following:

Fax: (910) 947-1668
Email: sheriff@moorecountync.gov
Mail: Moore County Sheriff's Office
302 S McNeill St
Carthage, NC 28327

G. SCHEDULE CHANGE OR CANCELLATION PROCEDURES

The Secondary Employment Coordinator will try to accommodate schedule change requests if made at least 24 hours before the job begins.

Cancellations by the Secondary Employer must be made at least 24 hours before the job begins. If the Secondary Employment Coordinator receives less than 24 hours notice, the Secondary Employer will be required to pay each deputy assigned to the job for two hours at the rate provided for in Section B.

To cancel a job, contact the Secondary Employment Coordinator at (910) 947-2931. The Secondary Employer may also notify the Secondary Employment Coordinator by email at sheriff@moorecountync.gov.

H. FILLING ASSIGNMENTS

Secondary employment is voluntary and done on a deputy's time off from the Sheriff's Office. It can never be guaranteed that an off-duty assignment will be filled. The employer

may request that a particular deputy(ies) staff a job; however, whether the deputy(ies) actually are employed at this job is at the discretion of the Sheriff.

When an employer asks to hire a deputy of the Moore County Sheriff's Office, it is understood that any eligible deputy may work the job.

At the Sheriff's discretion, off-duty deputies may be activated to on-duty status and pulled away from their off-duty assignments. The priority of deputies of the Moore County Sheriff's Office is their full time assignment within the Sheriff's Office and any obligations, such as call-back or court, which come with their assignments.

I. DEPUTY NOT REPORTING FOR OFF-DUTY JOB

If a deputy is scheduled for and does not report to a job, the Secondary Employer will notify the Secondary Employment Coordinator at (910) 947-2931. If the deputy is scheduled after business hours or on the weekend, the Secondary Employer will notify the shift supervisor at (910) 947-2931.

J. TERM OF AGREEMENT

This Secondary Employment Agreement will become effective as of the date signed by the Sheriff, or designee, and will remain in full force and effect for one year.

SECONDARY EMPLOYER

_____

By: _____

Date: _____

MOORE COUNTY SHERIFF'S OFFICE

_____

By: _____

Date: _____

Moore County Sheriff's Office
SECONDARY EMPLOYMENT APPLICATION

Employer Information			**Date of Request**	
Employer Name:			Contact Person:	
Address:			Phone:	Mobile Phone:
City:	State:	Zip:	Fax:	Other:
Type of Business:	ABC Permit: ☐Yes ☐No		E-mail:	

Job Information:		
Job Location/Address:	Job Start Date:	End Date:
Nature of Job: ☐Security ☐Traffic ☐Other:	Start Time:	End Time:
Number of Deputies Requested:		
Description of the job/event and the requested duties of the deputies:		

To be completed by the Sheriff's Office:

Payment Method: ☐Cash ☐Check ☐Money Order			
No. of Deputies:	No. of Hours:	Amount Due:	Amount Paid:
Actual No. of Deputies:	Actual No. Hours:	Actual Amount Due:	Invoice or Reimburse:

Application Approved By: _____ Date: _____

Fee Schedule

Sheriff's Office

Mission:

The mission of the Moore County Sheriff's Office is to improve the quality of life for the citizens of Moore County by providing a safe community in which the citizens can live, work and prosper.

Fee Schedule - Item	FY18/19 Fee Amount
In-State Civil Process Service Fee N.C. General Statute 7A-311 Currently $30.00	Set by State
Out-of-State Civil Process Service Fee N.C. General Statute 7A-311	$100.00
Concealed Handgun Permit N.C. General Statute 14-415.19 Currently $90.00	Set by State
Document Notarization N.C. General Statute 10A-10 Currently $5.00	Set by State
Storage fees for weapons and ammunition stored pursuant to a Domestic Violence Orders. A fee of $30.00 will be charged for the storage of one weapon. A fee of $5.00 will be charged for each additional weapon. If a weapon is stored, a fee of $5.00 will be charge for the storage of any ammunition. If a weapon is not stored, a fee of $30 will be charged for the storage of any ammunition.	$30.00
The resident county of a person who is transported to a mental health facility by the Sheriff's Office will be billed for the mental transport at a rate of $30 per hour per deputy	$30.00
Fingerprints - A fee of $10.00 will be charged for fingerprints.	$10.00
Noise Ordinance Permit	$25.00
Reports for Insurance Companies	$2.00
Change of Name or Address for a Concealed Carry Permit, NCGS 14-415.19	Set by Statute
Replacement of Access Cards (does not apply to normal wear and tear) NEW	$5.00 per card
Off Duty Special Assignments for Deputies	$50.00/hour
Off Duty Special Assignments on Holidays for Deputies	$70.00/hour

Agenda Item: VIII.I.
Meeting Date: December 3, 2018

MEMORANDUM TO BOARD OF COMMISSIONERS:

FROM: **Tami Golden, Internal Auditor**

DATE: **December 3, 2018**

SUBJECT: **Amend the FY18-19 Budget Ordinance, Section 10. Trust and Agency Funds – for the Sheriff's Department**

REQUEST:
Consider making a motion to approve the attached resolution amending Section 10, page 9 of the FY2018-2019 Moore County Budget Ordinance as follows:

Remove Neil Godfrey, Sheriff and Frank Rodriguez, Chief Deputy, from the list of persons authorized to sign checks on the Moore County Sheriff's Department Civil Fund and the Inmate Trust Fund.

Add Sheriff Ronnie Fields, Chief Deputy Richard Maness and Major Andy Conway to the list of persons authorized to sign checks on the Moore County Sheriff's Department Civil Fund and the Inmate Trust Fund effective December 3, 2018.

BACKGROUND: None

IMPLEMENTATION PLAN:
Consider adopting a resolution authorizing the removal of Sheriff Neil Godfrey and Chief Deputy Frank Rodriguez as authorized signers on the Moore County Sheriff's Department Civil Fund and the Inmate Trust Fund and add Sheriff Ronnie Fields, Chief Deputy Richard Maness and Major Andy Conway effective December 3, 2018.

FINANCIAL IMPACT STATEMENT:
None

RECOMMENDATION SUMMARY:
Make a motion to approve the attached resolution to remove Sheriff Neil Godfrey and Chief Deputy Frank Rodriguez as authorized signers on the Moore County Sheriff's Department Civil Fund and the Inmate Trust Fund and add Sheriff Ronnie Fields, Chief Deputy Richard Maness and Major Andy Conway effective December 3, 2018 on Section 10, page 9 of the FY 18/19 Moore County Budget Ordinance.

SUPPORTING ATTACHMENTS:
Resolution
Approved FY2018/2019 Budget Ordinance - Original

RESOLUTION TO AMEND SECTION 10. OF THE MOORE COUNTY BUDGET ORDINANCE FOR FISCAL YEAR 2018-2019 FOR THE REMOVAL AND ADDITION OF INDIVIDUALS AUTHORIZED TO SIGN CHECKS IN TRUST AND AGENCY FUNDS

WHERAS, the Moore County Board of Commissioners require individuals authorized to sign checks in Trust and Agency Funds to be designated Special Deputy Finance Officer for this purpose; and

WHERAS, Neil Godfrey, Sheriff, needs to be removed from the list of persons authorized to sign checks (due to his retirement) effective December 1, 2018; and

WHERAS, Frank Rodriguez, Chief Deputy, needs to be removed from the list of persons authorized to sign checks effective December 1, 2018; and

WHEREAS, Ronnie Fields, Sheriff, needs to be added to the list of persons authorized to sign checks effective December 3, 2018; and

WHEREAS, Richard Maness, Chief Deputy, needs to be added to the list of persons authorized to sign checks effective December 3, 2018; and

WHEREAS, Andy Conway, Major, needs to be added to the list of persons authorized to sign checks effective December 3, 2018; and

WHERAS, the Board hereby declares that the following individuals are authorized to sign checks on the County of Moore Sheriff's Department Civil Fund and the Inmate Trust Fund and amends the FY18/19 Moore County Budget Ordinance as follows:

Ronnie Fields – Sheriff
Richard Maness – Chief Deputy
Andy Conway - Major
James Furr – Captain
Bill Flint - Lieutenant
Lydia Craven – Administrative Asst II
Vonda Purvis – Administrative Asst II

NOW THEREFORE BE IT RESOLVED that the names listed above are authorized signer on the Moore County Sheriff's Department Civil Fund and the Inmate Trust Fund.

Adopted this 3rd day of December 2018.

_____
Catherine Graham, Chair
Moore County Board of Commissioners

_____
Laura M. Williams, Clerk to the Board

COUNTY OF MOORE

BUDGET ORDINANCE

FY 2018/2019

Final

BUDGET ORDINANCE

AN ORDINANCE ADOPTING THE ANNUAL BUDGET AND SETTING THE TAX RATE FOR THE COUNTY OF MOORE FOR FISCAL YEAR 2018-2019.

WHEREAS, Article 3 of Chapter 159 of the North Carolina General Statutes (NCGS) requires local governments in North Carolina to adopt ordinances establishing an annual budget, in accordance with procedures established in said Article 3, and

WHEREAS, the Moore County Board of Commissioners, following a public hearing as required by law has considered the proposed annual budget for Moore County for the 2018-2019 Fiscal Year,

NOW, THEREFORE BE IT ORDAINED BY THE COUNTY OF MOORE BOARD OF COMMISSIONERS THAT:

SECTION 1. REVENUES: The following revenues are hereby appropriated for operating the county government for the Fiscal Year beginning July 1, 2018 and ending June 30, 2019:

GENERAL FUND BUDGET SUMMARY

Revenues:

Property Taxes	$57,131,140
Privilege License	$0
Rental Vehicle Tax	$85,000
Sales Tax	$18,073,217
ABC Revenues	$641,000
Interest income	$850,000
Transfers In – Bond Interest	$2,010,000
Departmental Revenues and Fees	$9,006,524
Child Support Enforcement	$847,085
Social Services	$5,233,392
Public Health	$749,769
Other Grants	$718,220
Aging	$819,298
Appropriated Fund Balance	$0
TOTAL REVENUES	$96,164,645

SECTION 2. EXPENDITURES: The following expenditures are appropriated to the General Fund and other funds as described in sections 6 through 18 for the Fiscal Year beginning July 1, 2018 and ending June 30, 2019:

Expenditures

General Government	
Governing Body	$211,029
Administration	$657,339
Human Resources	$267,256
Finance	$703,767
County Attorney	$832,611
Tax	$1,769,697
Board of Elections	$564,273
Register of Deeds	$1,513,567
Information Technology/GIS	$2,039,912
Property Management	$4,387,361
TOTAL	$12,946,812
Public Safety	
Sheriff	$6,968,774
Sheriff-Detention Center	$4,200,305
Sheriff-Animal Center	$915,845
Day Reporting Center	$119,486
Youth Services	$91,070
Emergency Management/E-911	$1,359,832
TOTAL	$13,655,312
Environmental and Community Development	
Solid Waste	$2,231,507
Planning and Community Development	$371,091
Planning Code Enforcement	$491,680
Cooperative Extension Service	$263,328
Soil and Water Conservation Service	$222,514
TOTAL	$3,580,120

Human Services	
Child Support Enforcement	$712,262
Veterans Services	$201,291
Aging/Senior Center	$1,376,438
Social Services	$8,495,254
Public Health	$3,989,754
TOTAL	$14,774,999
Cultural Development	
Library	$592,584
Parks and Recreation	$611,594
TOTAL	$1,204,178
Education	
Public School Current Expense	$29,050,000
Public School Capital	$750,000
Public School Digital Learning	$750,000
Public School Capital Reserve Transfer	$1,315,331
Public Schools Debt Service-Principal	$3,968,494
Public School Debt Service-Interest	$2,105,622
Community College Current Expense	$4,512,262
Community College Capital Reserve Transfer	$604,165
Community College Debt Service-Principal	$731,508
Community College Debt Service-Interest	$420,071
TOTAL	$44,207,453
Non-Profits/Court Facility Costs/Non-Departmental	$2,281,803
Transfers	
Court Facility	$1,314,553
TOTAL	$3,596,356
Debt Service – County P&I(excluding Education)	$2,199,415
TOTAL EXPENDITURES	$96,164,645

SECTION 3. AD VALOREM TAX LEVY

A. There is hereby levied for Fiscal Year 2018-2019, an ad valorem tax on all property having a situs in Moore County as listed for taxes as of January 1, 2018, at a rate of forty–six and five tenths (46.5 cents) per $100 dollars of assessed value of such property, pursuant to and in accordance with the Machinery Act, Chapter 105 of the NC General Statutes and other applicable laws.

B. There is hereby levied for Fiscal Year 2018-2019, an unified fire tax rate on all property having a situs in the Moore County Fire Protection Service District at a rate of nine and zero tenths (.095 cents) per $100 dollars of assessed value of such property in Moore County which is attached to and made a part of this ordinance.

C. There is hereby levied for Fiscal Year 2018-2019, an Emergency Medical Service Advanced Life Support Tax on all property within such emergency service district, as listed for property taxes as of January 1, 2018, at a rate of three cents (.04 cents) per one hundred dollars ($100) of assessed value of such property, pursuant to and in accordance with the Machinery Act found in Chapter 105 of the North Carolina General Statutes and other applicable laws. Such tax can be used solely for the purpose of providing Emergency Medical Services.

SECTION 4. LEVY OF OTHER TAXES

There is hereby levied, all County Rental Vehicle Taxes as authorized by the NCGS, and other such taxes, as provided in the ordinances and resolutions duly adopted by the Board of Commissioners.

SECTION 5. AUTHORIZED TRANSFER OF APPROPRIATIONS, CONTRACTING LIMITATION, AND OTHER MATTERS:

A. AUTHORIZED TRANSFER OF APPROPRIATIONS

The Budget is adopted at the Fund level and the County Manager or Assistant County Manager, or his/her designee is hereby authorized to transfer appropriations between funds under the conditions listed below:

1. The County Manager, Assistant County Manager, or his/her designee may transfer funds between departments within a Fund without limitation, but shall report them to the Board of Commissioners by the Finance Office.

2. The County Manager, Assistant County Manager, or his/her designee may transfer amounts by budget amendment between funds and these budget amendments must be reported and approved by the Board of Commissioners in an itemized report.

3. The Finance Officer or designee can approve budget transfers up to $10,000 within the same fund.

B. CONTRACTING LIMITATION

1. Any appropriations for land and new buildings included in this ordinance may be obligated only after approval of the Board of Commissioners.

2. The County Manager, Assistant County Manager, or his/her designee is authorized to obligate through the necessary agreements, contracts, grant agreements, purchase orders or other such documents, funds included in this budget ordinance up to $50,000 for the following purposes:

   a. Initiate grant agreements to public and non-profit agencies;

   b. Leases of routine business equipment;

   c. Consultant, professional, and/or maintenance service agreements;

   d. Purchase of apparatus, supplies, construction, repair work, and materials where formal bids are not required by state law or county policies;

   e. Agreements for the acceptance of State and Federal grant funds.

3. Any total purchase or service at $50,000 or more will have a contract and must be approved by the Board of Commissioners.

4. The Health Director is hereby authorized to execute necessary agreements within the Health Operational Fund up to $50,000 in accordance with State law and County policies. The Health Director is to notify the County Manager and Assistant County Manager or his/her designee and provide a copy of any such agreements authorized in this paragraph no later than the next work day. Any amount $50,000 and above must have the approval of the Board of Commissioners unless the Board of Commissioners authorizes the Health Director to approve the necessary agreements.

5. Department Directors are hereby authorized to execute contracts up to $5,000 for their respective departments only.

C. OTHER MATTERS

1. All fees, commissions, and sums paid to or collected by any County official, officer, or agent for any service performed by said official, officer or agent in his/her official capacity shall inure to the benefit of the County and are considered County funds.

2. A Designee of the Chief Finance Officer is hereby designated as a Deputy Finance Officer for purposes of pre-audit functions pursuant to Chapter 159 of the NC General Statutes.

3. In accordance with Article V of the North Carolina Constitution, the County Manager and Assistant County Manager shall require the following prior to releasing public funds to other governmental agencies or private groups:

   a. The activity to be funded is for a public purpose.
   b. The activity to be funded is one the County is authorized to undertake or for which the County has specific statutory authorization to fund.
   c. Through appropriate means, the County maintains some degree of control over the funds provided through this ordinance to a governmental agency or private group.

4. The County Manager, Assistant County Manager, or his/her designee is authorized to disburse the Moore County Fire Protection Service District tax revenues up to and including the amount approved in this ordinance by the Board of Commissioners. The balance, in this fund, if any, will be held by the County as an apparatus and building reserve for future purchases for the Rural Fire Protection Service Districts upon approval of the Fire Commission.

SECTION 6. ENTERPRISE FUNDS

A. The following funds are designated as Enterprise Funds and are to be accounted for as such:

Water Pollution Control Plant Fund	$5,307,539
Public Utilities Fund	$11,435,153

Note: The East Moore Water District Fund will be accounted for in a separate Budget Ordinance approved by the East Moore Water District Board.

SECTION 7. INTERNAL SERVICE FUNDS

The following funds are designated as Internal Service Funds, and will be accounted for as such:

Self-Insurance/Risk Management Fund	$8,338,676

SECTION 8. SPECIAL REVENUE FUNDS

Annual Special Revenue Funds:

A. EMERGENCY MEDICAL SERVICES / ALS FUND

The Emergency Medical Services Fund	$8,483,211

B. 911 TELEPHONE SYSTEM FUND

The E911 Telephone System Fund	$413,395

C. TRANSPORTATION SERVICES FUND

The Transportation Services Fund	$1,487,683

D. SOIL & WATER CONSERVATION DISTRICT

The Soil & Water Conservation District Fund	$21,771

E. Fire Protection Service District-The County accounts for the collection and distribution of property taxes on the assessed valuation of taxable property, as listed for taxes as of January 1, 2018, for special districts as listed attached hereto and made a part of this ordinance. The tax rate and appropriations shown on the Fire Protection Service District have been determined by the Fire Commission in conjunction with the various fire department representatives, and the County as necessary for the operation of their fire departments for FY 2019.

Fire Protection Service District Fund	$4,643,644

F. CAPITAL RESERVE FUNDS

The County will maintain seven (7) Capital Reserve Funds as multi-year Capital Project Funds for the purpose of paying for future non-enterprise fund governmental projects, future non-enterprise fund debt service, future enterprise fund capital projects, future school and college projects as listed below:

1. Capital Reserve for Governmental Projects (Fund 250)
2. Capital Reserve for Debt Service (Fund 251)
3. Capital Reserve for Enterprise Projects – Consists of 3 separate capital reserve enterprise fund transfers from Water Pollution Control Plant, Public Utilities and East Moore Water Districts funds into this Capital Reserve for Enterprise Projects. (Fund 252)
4. Capital Reserve for Capital Projects for Sandhills Community College (Fund 253)
5. Capital Reserve for Debt Service for Sandhills Community College (Fund 254)
6. Capital Reserve for Capital Projects for Moore County Schools (Fund 255)
7. Capital Reserve for Debt Service for Moore County Schools (Fund 256

G. MULTI-YEAR SPECIAL REVENUE GRANTS FUND

1. Multi – Year Grant Fund 240

SECTION 9. COMPONENT UNIT FUNDS

The County maintains funds for the Convention and Visitors Bureau, and Moore County Airport Authority, as component units, and shall incorporate the budgets as adopted by the respective boards into the County Accounting records.

Convention and Visitors Bureau $1,745,300

Airport Authority $2,801,591

SECTION 10. TRUST and AGENCY FUNDS

The County maintains various trust funds. Trust and Agency Funds are identified as:

A. Social Services and Sheriff Department Trust Funds-These two departments must maintain certain funds in their respective departments for daily operation. The following funds are authorized:

1. Social Services-Charitable Fund-accounts for funds donated to the department for specific needs.

2. Social Services-Client Fund–accounts for funds belonging to individuals who are unable to maintain those funds themselves.

3. Sheriff's Department-Civil Fund-accounts for funds used in the legal aspects of docketing and collection of judgments.

4. Sheriff's Department Inmate Trust Fund-accounts for commissary and inmate services.

5. Special Tax District Municipal Funds-account for the collection and disbursement for special taxing districts and municipalities.

NCGS require individuals who sign checks in Trust and Agency Funds to be designated Special Deputy Finance Officer for this purpose only. On a monthly basis, each Special Deputy Finance Officer listed below will provide the County Finance Officer with a copy of the reconciled bank statement and a statement of receipts and disbursements. The following individuals are hereby authorized:

Neil Godfrey – Sheriff
Frank Rodriguez – Chief Deputy
James Furr – Captain
William Flint - Captain
Lydia Craven – Administrative Asst II
Vonda Purvis - Administrative Asst II

SECTION 11. CAPITAL PROJECTS BUDGETS

The County uses Capital Project Budgets and has incorporated these budgets into the financial and accounting systems. Capital Project Funds are used to account for capital projects that span fiscal years and/or may take more than one fiscal year to complete. The following categories of projects are accounted for in such manner:

Community Development Block Grant Projects – Fund 400

Airport County Capital Projects – Fund 450

School and College Capital Projects – Fund 470, 480, 481, 482, 483 and 490

County Facilities Expansion Capital Project – Fund 430

Emergency Communication Narrow Banding Project – Fund 431

Edgewood Terrace Water Main Project – Fund 446

2010 Limited Obligation Bond Public Utilities Project – Fund 441

2013 Water Sources Project – Fund 447

Public Works Capital Project – Fund 448

New Courthouse Building Capital Project – Fund 432

Vass Phase II Sewer System Improvements Capital Project – Fund 411

Parks and Recreation Capital Project – Fund 433

Elections Building Capital Project – Fund 434

Cell 6 Landfill Expansion Capital Project – Fund 435

SECTION 12. TEN YEAR CAPITAL PROJECT PLAN

The County Manager has prepared a ten year capital forecast. It is included as a part of the budget document for planning purposes only. The ten year capital plan does not authorize the expenditure of funds.

SECTION 13. MOORE COUNTY PUBLIC SCHOOLS

The Moore County School Board may not adjust the County appropriation in any manner without prior approval of the Board of Commissioners in accordance with NCGS 159-13.

SECTION 14. SANDHILLS COMMUNITY COLLEGE

The County has provided funding to the Community College for Current Expense and Plant Fund expenditures in accordance with NCGS 115D-55. The Community College may not adjust County appropriations in any manner without the prior approval of the Board of Commissioners.

SECTION 15. DUAL SIGNATURES ON CHECKS AND ELECTRONIC AND FACSIMILE SIGNATURES

The County will use dual signatures on checks and drafts made on County funds in accordance with NCGS 159-25(b). The signatures of the County Manager or Assistant County Manager and the Finance Officer or the Deputy Finance Officer, following proof of warrant, are the authorized signatures of Moore County.

Pursuant to NCGS 159-28.1, the County authorizes the use of electronic signatures, facsimile signature machines, signature stamps, or similar devices in signing checks and drafts and in signing the pre-audit certificate on contracts or purchase orders. The Finance Officer will be responsible for the custody of their electronic signature, facsimile machines, stamps, plates, and other devices.

Pursuant to NCGS 66-58.4, the County is authorized to use and accept electronic signatures in the execution of contracts. Any individual authorized to execute contracts on behalf of the County is authorized to do so using an electronic signature. All electronic signatures must be in compliance with NCGS 66-58.5.

SECTION 16. FINANCIAL REPORTING

The Finance Officer, or designee, will submit a monthly financial report for the County Manager, Assistant County Manager and the Board of Commissioners and, from time to time, other reports as required by the County Manager, Assistant County Manager and/or the Board of Commissioners.

SECTION 17. RESERVES FOR ENCUMBRANCES

The reserves for encumbrances as of June 30, 2018 and carry over appropriations representing prior commitments as of that date shall be re-appropriated pursuant to NCGS 159-13 to the departments within the various funds unless excluded by the County Manager or Assistant County Manager. Expenditures against these encumbrances may be made during fiscal year 2018-2019 as the previous commitments are satisfied.

SECTION 18. FEE SCHEDULE

The Annual Fee Schedule, which is attached to this ordinance, sets all fees authorized to be charged by the County for County goods, services or other functions provided by County personnel, equipment, including consultation and other such activities; and, is hereby approved.

SECTION 19. INVALID OR UNCONSTITUTIONAL PORTIONS OF THIS ORDINANCE

Should any section, paragraph, sentence, clause or phrase of this ordinance be declared unconstitutional or invalid for any reason, the remainder of said ordinance shall not be affected thereby.

SECTION 20. EFFECTIVE DATE

That this ordinance shall be in full force and effect on July 1, 2018.

Adopted this 19 day of June 2018:

Catherine Graham

Catherine Graham, Chair

Moore County Board of Commissioners

Agenda Item: X.A.
Meeting Date: **December 3, 2018**

MEMORANDUM TO THE BOARD OF COMMISIONERS

FROM: **Debra Ensminger**
Planning and Transportation Director

DATE: **November 7, 2018**

SUBJECT: **Unified Development Ordinance Text Amendment**

PRESENTER: **Debra Ensminger**

REQUEST
Moore County Planning Staff is requesting the below text amendments to the Moore County Unified Development Ordinance:

Bold Text – additions to the ordinance
~~Strikethrough Text~~ - deletions from the ordinance

1. AMEND Chapter 6 (Table of Uses), Section 6.1 (Table of Uses) to add Adult Gaming Establishments as a conditional use:

COMMERCIAL USES	RA-20	RA-40	RA-2	RA-5	GCSL	GCWL	RE	RA-USB	RA	P-C	VB	B-1	B-2	I	Specific Use Standards	Bldg. Code Group
ADULT USES																
Adult Gaming Establishments														**C**	**8.52**	**B**
Bars / Tavern											C		P		8.53	A-2
Brewery / Winery									C		P		P	P	8.54	A-2, F
Dance Club, Night Club, Billiard											Z		P		8.55	A-2, A-3
Distillery														P	8.56	F-1
Massage & Bodywork Therapy Practice, Unlicensed													P		8.57	B
Pawn Shop											Z		P	P	8.58	B
Sexually Oriented Business														Z	8.59	A-2, M
Tattoo Parlor, Body Piercing													P		8.60	B

REASON. New language reflects the need of adult gaming establishments.

2. ADD Chapter 8 (Specific-Use Standards), Section 8.52 (Adult Gaming Establishments) as follows:

   A. <u>Definition</u>. Any establishment deemed legal by state law, featuring 1 or more stand-alone electronic or conventional gaming units, skill-based or otherwise, or serving 1 or more patrons in such a capacity at any one time, which also rewards patrons with cash or other monetary payments, goods or certificates for services which are redeemable for cash or other monetary payment on or off premise and including on-line redemptions, as well as any rewards which cannot be legally obtained, consumed, or otherwise used by minors. Any use meeting this definition shall be considered a primary use regardless of association or location in conjunction with other permissible primary uses. State of North Carolina sanctioned lottery functions shall not be considered as adult gaming establishments for the purposes of this ordinance.

   B. <u>Standards</u>. All buildings, outdoor seating/ entertainment, and parking areas shall be 50 feet from any residentially zoned property line. 1 parking space for each 2 people at full capacity. No more than 4 machines per location.

REASON. New language reflects the need of adult gaming establishments due to recent inquiries.

3. AMEND Chapter 8 (Specific-Use Standards), Section 8.85 (Indoor Recreation) as follows:

   A. <u>Definition</u>. A fully enclosed facility providing for one or several recreational uses including sport auditoriums (basketball, dance, martial arts, soccer, swimming, tennis, wrestling), batting cages, bowling alleys, skating rinks, and other recreational uses such as non-profit community centers, non-profit youth club facilities, health and fitness clubs, gyms, ~~and~~ movie theatres, **and general gaming establishments**.

   B. <u>General Gaming Establishment</u>. Any establishment deemed legal by state law, excluding billiards halls, adult gaming establishments and any others similarly defined in this chapter, whose primary use is to provide entertainment services to the general public in the form of electronic or conventional gaming units which provide either no reward to patrons or rewards of limited value such as children's toys, games, and novelties when all of said rewards can be legally obtained and used by all ages and are not redeemable for cash or any other kind of compensation or services on or off premises, including on-line redemptions. Examples include traditional video game arcades and children's and family game centers, whether stand-alone or in conjunction with a restaurant or other permissible uses. This shall be considered a primary use when occupying more than 50 percent of the gross floor area of an establishment or being used by more than 50 percent of the patrons at any time or representing more than 50 percent of the total sales of the establishment.

C. Standards. All buildings and parking shall be located a minimum 50 feet from any residentially zoned property line. 1 parking space for every 2 participants at full capacity.

REASON. New language reflects the need of general gaming establishments due to recent inquiries to establish said use within Moore County.

4. AMEND Chapter 8 (Specific-Use Standards), Section 8.111 (Manufactured Home or Recreational Vehicle, Temporary Use) as follows:

A. Standards. A temporary dwelling may be permitted concurrently with or after the issuance of the building permit for the principal dwelling for up to 12 months, which may be extended once by the Administrator for an additional 6 month expiration of said eighteen-month period, the expiration of the building permit for the dwelling, or within 30 days of the Certificate of Occupancy, the temporary permit shall become invalid.
In the event of a natural disaster, manufactured homes, RVs, and FEMA trailers may be permitted, including on a separate lot, without a building permit being issued for the damaged home, and may receive multiple extensions beyond the 12 months for the temporary use, as determined necessary by the Zoning Administrator.

REASON. New language reflects the need of temporary housing during a disaster relief.

CONSISTENCY WITH THE ADOPTED 2013 LAND USE PLAN

The Board of Commissioners Consistency Statement which speaks to Land Use Plan goals is included for the Board's review and consideration.

IMPLEMENTATION PLAN

Hold the public hearing and approve/deny the text amendment request.

FINANCIAL IMPACT STATEMENT

No financial impact to the County's FY 2018-2019 budget.

PLANNING BOARD RECOMMENDATION

The Planning Board met on November 1, 2018 and unanimously recommended approval.

RECOMMENDATION SUMMARY:

Staff recommends the Moore County Board of Commissioners to make two separate motions:

Motion #1: Make a motion to adopt the attached Moore County Board of Commissioners Land Use Plan Consistency Statement (Approval) and authorize the Chairman to execute the document as required by North Carolina General Statute 153A-341.

Motion #2: Make a motion to approve or deny the proposed text amendment to the Moore County Unified Development Ordinance.

ATTACHMENTS

- RLUAC (Regional Land Use Advisory Commission) Review Letter
- Board of Commissioners Land Use Plan Consistency Statement

MOORE COUNTY
Proposed Text Amendments to the Unified Development Ordinance
To Allow Adult Gaming Establishments as a Conditional Use
Specifically Section 6.1 (Table of Uses) and Chapter 8
November 8, 2018

The Regional Land Use Advisory Commission (RLUAC) staff and Board of Directors have reviewed the proposed text amendments (listed above) for the Moore County Unified Development Ordinance and find no conflicts with the recommendations contained in the 2003 and 2008 Joint Land Use Studies

RLUAC therefore has no issues or concerns with the proposed text amendments to the Moore County Unified Development Ordinance.

Thank you for allowing RLUAC the opportunity to review these proposed changes.

Robert McLaughlin, Chairman

James Dougherty, Executive Director

* PO Drawer 1510 * Fayetteville * NC * 28302 * Tel: (910) 583-1233 * director@rluac.com *

<u>Moore County Board of Commissioners</u>
<u>Land Use Plan Consistency Statement</u>
Text Amendment - Unified Development Ordinance

The Moore County Board of Commissioners finds that:

1. The text amendment request is consistent with the following goals in the 2013 Moore County Land Use Plan:

Goal 1: Preserve and Protect the Ambiance and Heritage of the County of Moore (inclusive of areas around municipalities):

- Recommendation 1.5: Encourage and support development and land use principles by ensuring Moore County's cultural, economic, and natural resources are considered appropriately.

Goal 4: Provide Information and Seek Citizen Participation:

- Action 4.1.1: Continue to support and implement easy to understand guidelines to incorporate throughout governmental departments.

2. The text amendment is consistent with the goals listed above by zoning adult and general gaming establishments within appropriate zoning districts, while ensuring Moore County's cultural and economic resources are considered. Also, the Land Use Plan calls for the adoption of straightforward standards and procedures. By addressing temporary housing during disasters, the county is providing clear guidelines.

3. The text amendment is reasonable and in the public interest because the ordinance has been updated to zone adult and general gaming establishments appropriately, within certain zoning districts within the County, in consideration that adult gaming establishments may have negative secondary impacts on surrounding land uses particularly residential uses. By differentiating between adult and general gaming establishments, the text amendment is also easily understood by developers and the general public. Also, accommodating for temporary housing during disaster relief ensures that the public is given the opportunity to recover after an unfortunate event.

Therefore, the Moore County Board of Commissioners **APPROVES** the text amendments to the Unified Development Ordinance, as proposed.

_____ _____

Catherine Graham, Chair Date
Moore County Board of Commissioners

Agenda Item: X.B.
Meeting Date: 12/03/2018

MEMORANDUM TO: **MOORE COUNTY BOARD OF COMMISSIONERS**

FROM: **Rachel Patterson, GIS**

DATE: **December 3, 2018**

SUBJECT: **Public Hearing – Amendment to the Moore County Road Name and Addressing Ordinance**

PRESENTER: **Rachel Patterson**

REQUEST:
Request is hereby made for the Board of Commissioners to amend the Moore County Road Naming and Addressing Ordinance to add 13 roads to the ordinance.

BACKGROUND:
On July 10, 1989, the Moore County Board of Commissioners enacted the Moore County Road Name and Addressing Ordinance, establishing the names of roads, a procedure for the future naming or renaming of roads and the numbering of all houses, mobile homes, commercial and industrial buildings. In adopting this Ordinance, the Board recognized the need for the naming of roads outside of municipal limits in the County of Moore and the numbering of residential, commercial and industrial structures, and accessory buildings thereto, as being essential for the operation of the enhanced 911 dispatch system in the County of Moore.

Section 3 of this Ordinance states "No new roads outside of municipal limits in the County of Moore, whether a part of the State Secondary Road System or Private, shall be named without approval of the Board of Commissioners." The roads listed here are for initial naming and are privately maintained; Pressley Farm Ln (P4171), Burley Oak Dr (P4172), High Branch Dr (P4173), Starpoint Dr (P4174), Sierra Dr (P4175), Twin Leaf Ct (P4176), Alendale Dr (P4177), Bassett Ct (P4178), Danbury Ct (P4179), Enfield Dr (P4180), Ingleside Ln (P4181), Stillwater Ct (P4182), and Weatherford Ln (P4183).

IMPLEMENTATION PLAN:
Upon adoption of this amendment, a formal letter of notification of the approved road names will be forwarded to individuals who own property along each of these roads.

FINANCIAL IMPACT STATEMENT:
Not Applicable.

RECOMMENDATION SUMMARY:
Staff respectfully requests that the Board of Commissioners make a motion to add 13 roads to the Moore County Road Name and Addressing Ordinance as proposed.

SUPPORTING ATTACHMENTS:
Road Name and Addressing Ordinance
Legal Notice

AMENDMENT TO

THE MOORE COUNTY ROAD NAME AND ADDRESSING ORDINANCE

ADOPTED JULY 10, 1989
AND AS SUBSEQUENTLY AMENDED

RESOLVED by the Board of Commissioners of the County of Moore that Section III ROAD NAMING OF THE ABOVE REFERENCED ORDINANCE BE AMENDED TO ADD, RENAME, OR REMOVE THE FOLLOWING ROADS AS INDICATED:

ADD:

PRESSLEY FARM LN (P4171) .....*Located on the north side of Union Church Rd (SR 1805). Approximately 750 ft east of Hulsey Rd (SR 1806).*

LITTLE RIVER RUN SUBDIVSION:
Located off Page Store Rd (SR 1172). West of Eaker Dr (Lee County road).

BURLEY OAK DR (P4172)
HIGH BRANCH DR (P4173)
STARPOINT DR (P4174)
SIERRA DR (P4175)
TWIN LEAF CT (P4176)

STAR RIDGE FARMS SUBDIVSION:
Located off Star Ridge Rd (SR 1834). Approximately 1200 ft east of NC 22 Hwy.

ALENDALE DR (P4177)
BASSETT CT (P4178)
DANBURY CT (P4179)
ENFIELD DR (P4180)
INGLESIDE LN (P4181)
STILLWATER CT (P4182)
WEATHERFORD LN (P4183)

AND, FURTHER, that the effective date of this amendment to the above described Ordinance shall be upon adoption.

Adopted this 3rd day of December, 2018.

_____
Catherine Graham, Chair
Moore County Board of Commissioners

_____
Laura Williams, Clerk to the Board
Moore County Board of Commissioners

LEGAL NOTICE

Notice is hereby given that a Public Hearing will be held before the Moore County Board of Commissioners at 5:30 PM on Monday, December 3, 2018, in the Commissioners' Meeting Room located on the 2nd floor of the Historic Courthouse in Carthage, North Carolina. The purpose of the hearing is to consider the following:

> An amendment to the Moore County Road Name and Addressing Ordinance to add thirteen roads to the Ordinance, which are Pressley Farm Ln, Burley Oak Dr, High Branch Dr, Starpoint Dr, Sierra Dr, Twin Leaf Ct, Alendale Dr, Bassett Ct, Danbury Ct, Enfield Dr, Ingleside Ln, Stillwater Ct, and Weatherford Ln.

Information pertaining to this amendment is available for review at the Moore County GIS Department, located at 302 S. McNeill St, Carthage, NC 28327, during normal business hours.

Interested persons are invited to attend. Accommodations for individuals with disabilities or impairments will be made upon request to the extent that reasonable notice is given.

Laura Williams,
Clerk to the Board

Agenda Item: XII.A.
Meeting Date: 12/3/18

MEMORANDUM TO BOARD OF DIRECTORS:

FROM: **Moore County Public Works / Solid Waste Division**

DATE: **November 26, 2018**

SUBJECT: **Fee Schedule Amendment for Moore County Landfill Transfer Station**

PRESENTER: **Chad Beane, Solid Waste & Recycling Division Manager**

REQUEST:
Approve the revised fee schedule for the Moore County Solid Waste Division.

BACKGROUND:
Recently the vendor that Moore County was under contract with to handle all recycling material gave notice to terminate the existing contract. With the recycling market in decline and the costs to haul and process recyclable material increasing dramatically, the Moore County Solid Waste Division is recommending an increase in tipping fees for recycling at the Moore County Transfer Station. Meeting was held with Utilities Task Force and also the municipalities that would be affected by this increase to inform them of changes in operations and also to field questions and concerns. The recycling market is such that it's a challenge to find a vendor that will accept the material and the costs to haul and process the material no longer is covered by the current rate of $25 per ton. Staff is recommending that the $25 per ton rate be amended to $100 per ton for Tipping Fee at the Moore County Landfill to cover these costs.

Also, the Tipping Fees for Construction & Demolition material was approved by the BOC based on the budgeted range of $46 - $48 per ton. This fee is based on CPI adjustments which had not been released at the time of fee schedule approval. Since that approval however the CPI adjustment was such that the fee is $48.07 per ton. With that said, we are asking the fee schedule reflect this adjustment and ask that the Board approve the new tipping fee for Construction and Demolition material at $48.07 per ton. Basically a $.07 increase from the previous approved Fee Schedule for the Solid Waste Division.

IMPLEMENTATION PLAN:
The implementation of the revised Fee Schedule would be put into place immediately following approval from the BOC. December 4, 2018 would be the immediate effective date to begin charging accordingly and staff can implement this plan upon BOC approval.

FINANCIAL IMPACT STATEMENT:
- The revised fee schedule is proposed to cover the costs to accept, haul and process the recycling material.
-No substantial financial impact for adjusting the Tipping Fee Schedule for Construction & Demolition material.

RECOMMENDATION SUMMARY:
Make a motion to approve the revised fee schedule for the Solid Waste Division.

SUPPORTING ATTACHMENTS: Revised Fee Schedule

Fee Schedule

Public Works - Solid Waste Division

Mission:

Public Works - Solid Waste Division provides excellent customer service and high regard for safety and preserving the environment by providing a highly organized and efficient system of recycling, solid waste collection and disposal services

Fee Schedule - Item	FY18/19 Fee Amount
Tipping Fees - (Construction & Demolition Materials; Land Clearing; Inert Debris) *% increase determined by CPI Adjustment*. Includes $2.00 NC Excise Tax.	$46.00-$48.00 (***To match Uwharie Environmental transfer station fee once CPI adjustment is published/released)*** ***Change to $48.07/ton***
C&D Minimum Charge	$5.00 minimum
Weigh Ticket (Truck wt. Only)	$10.00 / each
In the unlikely event of scale malfunctions or loss of electrical power rendering the scale inoperable, the following rates will apply:	
Construction Materials	$8.00 per cubic yard
Demolition Materials	$8.00 per cubic yard
Land Clearing Materials	$8.00 per cubic yard
Yard Waste Materials	$20.00/ton
Flat Rate charge	$5.00 minimum
Recycling Tipping Fee	$25.00 - $30.00/ton to $100/ton
Mobile Home Disposal:	
Single Wide	$500.00 / each
Double Wide	$700.00 / each
Container Storage Fee: (Landfill Property)	
0 - 30 Roll-off Containers	$300.00 / month
Fees are hereby waived for all General Fund departments for Solid Waste/Landfill Fees debris	

Agenda Item: XII.B.
Meeting Date: December 3, 2018

MEMORANDUM TO BOARD OF COMMISSIONERS:

FROM: **Moore County Public Works / Solid Waste Division**

DATE: **November 26, 2018**

SUBJECT: **Contract with Judy D. Brooks Contractor Inc. for Removal and Hauling of Mulch from the Landfill**

PRESENTER: **Chad Beane, Solid Waste & Recycling Division Manager**

REQUEST:
Approve the contract with Judy D. Brooks Contractor Inc. for the removal of mulch from the County's Construction and Demolition Landfill.

BACKGROUND:
The County's Demolition Landfill brings in approximately 14,000 tons of leaf and limb material per year. The recent storms have posed an issue with a substantial influx of storm debris. Approximately 5,000 tons in the past two months. To continue operations and provide continual service for disposal of this material, the ground up material must be hauled off site to a permitted facility to make room for additional material coming in. The county and vendor agree that this material will be hauled to a permitted facility, where it will then be properly composted. The proper procurement process was followed and the county received bids on November 29, 2018.

Judy D. Brooks Contractor Inc. provided the County with a quote for the lowest cost, which was at the rate of $13.50 per ton.

IMPLEMENTATION PLAN:
Approve the contract with Judy D. Brooks Contractor Inc. and approve the Chair to sign all necessary documents.

FINANCIAL IMPACT STATEMENT:
Not to exceed amount of $100,000 in the current fiscal year.

RECOMMENDATION SUMMARY:
Make a motion to approve the contract with Judy D. Brooks Contractor Inc. for the purpose of removal and hauling of mulch material from the Moore County Landfill to a permitted facility and authorize the Chairman to sign the same upon approval by the County Attorney and Finance.

SUPPORTING ATTACHMENTS:
1. Contract
2. Bid Document

STATE OF NORTH CAROLINA **CONTRACT FOR SERVICES**

COUNTY OF MOORE

This Contract is entered into the ____ day of December, 2018, between the County of Moore, a political subdivision of the State of North Carolina (the "County"), and Judy D. Brooks Contractor, Inc., an entity incorporated in the State of North Carolina and doing business as Brooks Contractor (the "Contractor").

1. Services to be Provided and Agreed Charges

The Contractor agrees to provide services and materials (collectively referred to as "Services") contained in this Contract pursuant to the provisions and specifications identified in Attachment 1, which is incorporated by reference in this Contract. Pursuant to Section 3 of this Contract, the County agrees to pay for Services contained in Attachment 1.

2. Term of Contract

The term of this Contract is from December 3, 2018 through June 30, 2023.

This Contract is subject to the availability of funds to purchase the specified Services and may be terminated at any time during the term upon thirty (30) days' notice if such funds become unavailable.

3. Payment to Contractor

During the term of this Contract, the Contractor will receive from the County an amount not to exceed $100,000.00 for services rendered before July 1, 2019 and $100,000.00 per County fiscal year (July 1 – June 30) for services rendered thereafter. The aforementioned sums are full compensation for the provision of services as provided herein. The County agrees to pay at the rates specified for Services, satisfactorily performed or provided, in accordance with this Contract. Unless otherwise specified, the Contractor will submit an itemized invoice to the County by the end of the month during which Services are performed or provided. Payment will be processed promptly upon receipt and approval of the invoice by the County.

4. Independent Contractor

The County and Contractor agree that the Contractor is an independent contractor and will not represent itself as an agent or employee of the County for any purpose in the performance of the Contractor's duties under this Contract. Accordingly, the Contractor will be responsible for payment of all federal, state and local taxes as well as business license fees arising out of the Contractor's activities in accordance with this Contract. For purposes of this Contract taxes will include, but not be limited to, Federal and State Income, Social Security and Unemployment Insurance taxes.

The Contractor, as an independent contractor, will perform all services in a professional manner and in accordance with the standards of applicable professional organizations and licensing agencies.

5. Insurance

The Contractor will maintain Workers' Compensation Insurance for all of the Contractor's employees. The Workers' Compensation Insurance will be in the amounts prescribed by the laws of the State of North Carolina.

The Contractor will maintain, at its expense, the following minimum insurance coverage:

Bodily Injury	$1,000,000.00 per occurrence
Property Damage	$100,000.00 per occurrence
Bodily Injury/Property Damage	$1,000,000.00 combined single limit per occurrence

Professional liability insurance will be required whenever the Contractor is required to be certified, licensed, or registered by a regulatory entity or where the Contractor's error in judgment, planning, design, or etc. could result in economic loss to the County. If professional liability insurance is required, the coverage must provide for no less than $1,000,000.00 combined single limit per occurrence.

The Contractor agrees to furnish the County proof of compliance with the insurance coverage requirements of this Contract upon request. The Contractor, upon request by the County, will furnish a certificate of insurance from an insurance company, licensed to do business in the State of North Carolina and acceptable to the County, verifying the existence of the insurance coverage required by the County. The certificate will provide for sixty (60) days advance notice in the event of termination or cancellation of coverage.

6. Indemnification

To the fullest extent permitted by law, the Contractor will indemnify and hold harmless the County, its officials, agents, and employees from and against all claims, damages, losses, and expenses, direct, indirect, or consequential (including but not limited to fees and charges of engineers or architects, attorneys, and other professionals and costs related to court action or arbitration) arising out of or resulting from the performance of this Contract or the actions of the Contractor, its officials, employees, or contractors under this Contract or under the contracts entered into by the Contractor in connection with this Contract. This indemnification will survive the termination of this Contract.

7. Health and Safety

The Contractor will be responsible for initiating, maintaining and supervising all safety precautions and programs required by OSHA and all other regulatory agencies while providing Services under this Contract.

8. E-Verify

Pursuant to North Carolina General Statute § 143-133.3, E-verify Compliance, the County may not enter into a contract unless the contractor, and the contractor's subcontractors under the contract, comply with the requirements of Article 2 of Chapter 64 of the General Statutes. The Contractor represents and warrants that it is in compliance with the requirements of Article 2 of Chapter 64 of the General Statutes. Further, the Contractor warrants that any subcontractors used by the Contractor will be in compliance with the requirements of Article 2 of Chapter 64 of the General Statutes.

9. Iran Divestment Act Certification

The Contractor certifies that: (i) the Contractor is not listed on the Final Divestment List created by the State Treasurer pursuant to N.C.G.S. § 147-86.58 (the "Final Divestment List"), and (ii) the Contractor will not utilize any subcontractor performing work under this Contract, which is listed on the Final Divestment List. The Final Divestment List can be found on the State Treasurer's website at the address www.nctreasurer.com/Iran and should be updated every 180 days.

10. Non-Discrimination in Employment

The Contractor will not discriminate against any employee or applicant for employment because of age, sex, race, creed, national origin, or disability. In the event the Contractor is determined by the final order of an appropriate agency or court to be in violation of this provision or any non-discrimination provision of federal, state or local law, this Contract may be suspended or terminated, in whole or in part, by the County. In addition, the Contractor may be declared ineligible for further contracts with the County.

11. Governing Law

The validity of this Contract and any of its terms or provisions, as well as the rights and duties of the parties to this Contract, are governed by the laws of the State of North Carolina. All actions relating to this Contract in any way will be brought in the General Courts of Justice in the County of Moore and the State of North Carolina.

12. Termination of Agreement

This Contract may be terminated, without cause, by either party upon thirty (30) days written notice to the other party. This termination notice period will begin upon receipt of the notice of termination. Such a termination does not bar either party from pursuing a claim for damages for breach of the Contract.

This Contract may be terminated, for cause, by the non-breaching party notifying the breaching party of a substantial failure to perform in accordance with the provisions of this Contract and if the failure is not corrected within ten (10) days of the receipt of the notification.

Upon such termination, the parties will be entitled to such additional rights and remedies as permitted by law.

Termination of this Contract, either with or without cause, will not form the basis of any claim for loss of anticipated profits by either party.

13. Successors and Assigns

The Contractor will not assign its interest in this Contract without the written consent of the County. The Contractor has no authority to enter into contracts on behalf of the County.

14. Compliance with Laws

The Contractor represents that it is in compliance with all Federal, State, and local laws, regulations or orders, as amended or supplemented. The implementation of this Contract will be carried out in strict compliance with all Federal, State, or local laws regarding discrimination in employment.

15. Notices

All notices which may be required by this Contract or any rule of law will be effective when received by certified mail sent to the following addresses:

COUNTY OF MOORE:	MOORE COUNTY PUBLIC WORKS ATTN: RANDY GOULD, DIRECTOR P.O. BOX 1927 CARTHAGE, NC 28327
CONTRACTOR:	BROOKS CONTRACTOR 1195 BEAL ROAD GOLDSTON, NC 27252

16. Audit Rights

For all Services being provided under this Contract, the County has the right to inspect, examine, and make copies of any and all books, accounts, invoices, records and other writings relating to the performance of those Services. Audits will take place at times and locations mutually agreed upon by both parties. The Contractor must make the materials to be audited available within one (1) week of the request for them.

17. County Not Responsible for Expenses

The County will not be liable to the Contractor for any expenses paid or incurred by the Contractor unless otherwise agreed in writing.

18. Equipment

The Contractor will supply, at its sole expense, all equipment, tools, materials, and supplies required to provide contracted Services unless otherwise agreed in writing.

19. Priority of Documents

In the event of any inconsistency between the Contract and any attachment to the Contract, the Contract will have priority.

20. Severability

If any provision of this Contract shall be determined to be unenforceable by a court of competent jurisdiction, such determination will not affect any other provision of this Contract.

21. Non-Waiver

The failure by one party to require performance of any provision of this Contract will not affect that party's right to require performance at any time thereafter or to enforce other remedies available to it by law or under this Contract. In addition, no waiver of any breach or default of this Contract will constitute a waiver of any subsequent breach or default or a waiver of the provision itself.

22. Entire Agreement

This Contract and Attachment 1 constitute the entire understanding between the parties and supersedes all prior understandings and agreements, whether oral or written, relating to the subject matter hereof.

23. Amendment

This Contract may only be amended by the written mutual agreement of the parties.

24. Drafted by Both Parties

This Contract is deemed to have been drafted by both parties and no interpretation will be made to the contrary.

25. Headings

Subject headings are for convenience only and will not affect the construction or interpretation of any provision.

The parties have expressed their agreement to these terms by causing this Contract to be executed by their duly authorized officers or agents. This Contract is effective as of the date first written above.

COUNTY OF MOORE

_____
Catherine Graham, Chair
Moore County Board of Commissioners

ATTEST:

_____
Laura M. Williams
Clerk to the Board

CONTRACTOR

_____
By: _____
Title: _____

PREAUDIT CERTIFICATE

This instrument has been preaudited in the manner required by the Local Government Budget and Fiscal Control Act.

_____
Finance Officer or Deputy Finance Officer

ATTACHMENT 1

SCOPE OF SERVICES

A. The Contractor will provide all necessary supervision, labor, equipment, and materials required to provide the following Services:

1. The Contractor will remove and haul shredded yard waste from the Moore County Construction and Demolition Landfill, which is located at 456 Turning Leaf Way, Aberdeen, NC.

2. The Contractor will transport the yard waste to a North Carolina permitted compost facility. The per load quantity will be established using live-bottom trailers. The load count will be verified and determined by North Carolina Department of Agriculture and Consumer Services ("NCDA&CS") certified and inspected scale tickets, as provided by the Brooks Compost Facility.

3. The Contractor will load its vehicles with the yard waste to be transported.

4. The Contractor will haul a minimum of 2,500 tons of yard waste within the first thirty days of the date of execution of this Contract.

5. The County will pay the Contractor at the rate of $13.50 per ton. This rate is inclusive of all costs related to the removal of the shredded yard waste, which includes, but is not limited to, disposal fees and taxes.

6. All services will be provided in accordance with industry standards and practices.

7. All services will be provided to the satisfaction of the County.

REQUEST FOR PROPOSAL 2019-09 - SOLID WASTE - DEBRIS HAULING SERVICES
BID TABULATION
NOVEMBER 29, 2018

	Simmons & Simmons Management Inc. *	Judy D Brooks Contractor Inc. dba Brooks Contractors	Hazmat Emergency Response and Remediation Inc. **	Graham County Land Company LLC
Rate per Ton (County load Debris)	$10.95	$11.00	$44.80	$39.00
Rate per Ton (Vendor load Debris)	$14.00	$13.50	n/a	$49.00

*Quote based on being able to use the same site as Moore County is now using on US 1 South at Marston.
** Includes 1 free hour load time per truck. If greater than 1 hour/truck, demurrage = $85/hr/truck

Agenda Item: XII.C.
Meeting Date: 12/03/2018

MEMORANDUM TO THE MOORE COUNTY BOARD OF COMMISSIONERS:

FROM: **Deborah McGiffin, Cooperative Extension/County Director**

DATE: **11/19/2018**

SUBJECT: **NCSU Fork to Farmer Request for Application**

PRESENTER: Deborah McGiffin

REQUEST: Authorize Moore County Cooperative Extension to apply for a Fork to Farmer Partnership.

BACKGROUND: The Fork to Farmer Partnership promotes local farms by the state-wide distribution of a local Fork to Farmer video produced to highlight the relationship between local farmers who supply local restaurants, and by providing individual technical assistance to local farms who wish to supplement farm income through agritourism.

FINANCIAL IMPACT: Funds to produce the Moore County Fork to Farmer video will come from existing Extension departmental budget. Cost of video will be no more than $3,300.00.

IMPLEMENTATION PLAN: Upon approval of the Board of Commissioners, the Fork to Farmer Partnership application will be submitted to Department of Extension Community and Rural Development for acceptance into the program. Once approved, a short 3-5 minute video will be produced highlighting the relationship between a local Moore County farm and a local restaurant that sources its food from the farmer. The NCSU Fork to Farmer Partnership will market and distribute the video throughout the state to promote Moore County farms and agritourism. Also, the partnership will provide individual technical advice and assistance to any Moore County farm that wishes to expand their farming operation through agritourism.

RECOMMENDATION SUMMARY:

Make a motion to authorize the Moore County Cooperative Extension Service to apply and submit the Fork to Farm Partnership application to the NCSU Department of Extension Community and Rural Development, and authorize Moore County Extension to proceed with the production of the Moore County Fork to Farmer video utilizing funds available in the FY19 Extension budget.

ATTACHMENTS:

Fork to Farmer Partnership guidelines, description and application.

REQUEST FOR APPLICATIONS (RFA)

FORK TO FARMER PARTNERSHIPS

The local food movement is transforming the agriculture and food services sector. Farm to table restaurants play a significant role in this transformation. The model of using locally sourced produce, protein, and dairy is trending in the high-end restaurant sector and has resulted in numerous high-profile chefs receiving notable awards and showing significant business success. But these accolades have not always generated the same recognition for the farms who supply them.

A primary goal of the Fork to Farmer Initiative is to generate greater public awareness of the chef-farmer collaborations and the inputs that each of them brings to the table. By leveraging the high visibility of famous chefs with a record of supporting local small farms, we hope to increase visits to local farms and diversify farm income. This initiative, led by a team of NC State Extension specialists in economic development, local food, and tourism, partners with NC counties and regions to (1) make short videos about well-known farm to table chefs and the small family farmers that supply their restaurants; and (2) deliver agritourism training for these farmers to prepare them for farm visits by restaurant clientele and other local food tourists.

WHAT IS FORK TO FARMER?

The Fork to Farmer initiative leverages the high visibility of celebrated chefs to enhance the viability of small farms through new direct to consumer income from product sales and farm visit sales. We build marketing coalitions that allow small farmers to sell farm experiences and products to the public and offer a train-the-trainer program that enables the recruitment and accompaniment of participating small farmers.

WHY HAVE AN RFA?

This RFA process was created to help the project allocate resources to interested partners most ready to get farmers and chefs on board. Partners selected through this RFA process will receive online and face-to-face training and assistance as needed. Please note: at no point will direct funding from the project be provided to community partners.

EXPECTATIONS FOR APPLICANTS

Fork to Farmer strives to recruit committed partners to implement a project in their communities and works with chefs and farmers that are nominated and accompanied by project partners. Our partners get involved in this project to enhance the effectiveness of their ongoing efforts in community and tourism development with small-scale farmers in their region. Partner involvement with Fork to Farmer includes the following:

- Identifying suitable partnerships between celebrated chefs and nearby small farmers that supply them;
- Providing an expected amount of approximately $3,500 to cover film production costs (actual amount will depend on location and videographer);
- Forming a network of approximately 10 small scale farmers that supply local restaurants in their county or region and are interested in offering farm experiences and selling directly to consumers;

- Meeting periodically with the network of small farmers to provide support and training;
- Organizing periodic meet-ups with farmers in the network, local chefs, and tourism partners to foster communication and collaboration.

NC State project team involvement includes the following:

- Providing partners with a list of suggested videographers. Partners are free to choose their own videographers, provided that they abide by the project's videography guidelines;
- Providing partners and affiliated videographers with brand assets and videography guidelines;
- Disseminating the films, farm experiences and product sales to the public through dedicated web pages and social media strategy;
- Actively leading public relations efforts to bring awareness to films and the experiences and farm products sold by local small farmer networks;
- Brokering partnerships between chefs and tourism partners to develop and promote Fork to Farmer events and packages;
- Providing technical advice on film production, and co-curating the films' narrative and feel with partners;
- Providing train-the-trainer workshops on how to organize and supports mall farmer networks;
- Contributing as guest presenters to local workshops and meet-ups.

FOR MORE INFORMATION

Organizations interested in applying on behalf of their counties may find additional information and examples of previous films in the project portal: forktofarmer.ces.ncsu.edu

GUIDELINES

APPLICANTS

Governmental, non-governmental, non-profit and educational institutions are welcome to apply.

Private or public for-profit institutions/individuals will be considered, provided that their involvement in this project will constitute a Social Business venture.

APPLICATION PROCESS

1. Use the enclosed Application Template to collect information about supporting applicants, the local chef and the network of small farmers,
2. Use the online Application [tinyurl.com/fork2farmerapplication] to officially submit application,
3. Fork to Farmer project team will follow up with every applicant shortly after receiving submission to communicate our decision

TIMELINE

- Fork to Farmer accepts applications on a rolling basis, but we have a limited number of partners we can support each year.
- Aspiring partners are encouraged to contact Fork to Farmer project manager Becky Bowen (blbowen@ncsu.edu) well in advance of application due dates to share their intent to apply.
- Applications are accepted on a rolling basis. Applicants will be considered until the target number of yearly partnerships is reached.
- Aspiring partners can expect a response on the status of their application within two weeks after the submission deadline.
- Films must be completed within 6 months after a proposal is accepted.
- Tangible efforts to develop and energize a local network of small farmers interested in offering hands-on farm experiences on a by-reservation basis will be expected.

EVALUATION CRITERIA:

40% ***Alignment of nominated partners, chef, and small farmers with Fork to Farmer goals.*** The proposal should list at least 1 chef/restaurateur, 1 small scale farmer, 10 small farmers interested in the project, and two supporting organizations. Their backgrounds and the nature of their relationship should be outlined. Proposals including farmers with vulnerable livelihoods will be preferred.

30% ***Sustainability of the development plan***. The proposal should delineate a strategy for the sustained development of the county partnership beyond the scope of the initial joint efforts to produce the film. It should delineate a feasible plan for the continued coaching of small farmers, and their integration in the region's local foods tourism strategy.

30% ***Proposal clarity***. The proposed role of the aspiring Partner to building and sustaining a county partnership should be explained. The aspiring Partner should specify how the mission of the organization(s) matches the goals of Fork to Farmer.

FORK TO FARMER

APPLICATION TEMPLATE

Use this template to collect application information and keep it for your records.
Then submit the information through this Google form
tinyurl.com/fork2farmerapplication

Lead applicant
Name: Deborah B. McGiffin_____ Position/Title: _County Extension Director_____ Organization: _NC Cooperative Extension, Moore County_____ **Extension Office** ☐ Tourism Dev. Authority ☐ Other entity ☐ Work address, telephone and e- mail: __707 Pinehurst Avenue, Carthage, NC 28327 _ 910-947-4650 deborah_mcgiffin@ncsu.edu Indicate the source of your funding (approx. $3,500)? ___Moore County Government_____ Why do you think Fork 2 Farmer could bring desired benefits to your county? _ Twenty years ago there were 100 mostly small family-owned tobacco farms in Moore County. Today, there are ten of these small farms left. Because of the ending of the tobacco buyout in 2014, farmers were forced to transition out of tobacco and into new markets with uncertain outcomes. These prior tobacco farms and other small farms in general, struggling to remain profitable, looked to local food markets as a way to retain their livelihoods. Though farmers adapted to retail sales to meet their new customer base, the residential consumer, farms have had to diversify into multiple retail market outlets to reach customers and to remain productive. Two of those essential outlets are chefs and their restaurants, and agritourism. The Fork to Farmer video project can be an important marketing tool that will enable Moore County farms to reach a broader customer base and permit farmers to sustain and possibly expand their current farm operations. By highlighting the relationship between local farms and restaurants, customers viewing the video, will be encouraged to both patronize restaurants that feature local foods and visit the farms where the food is produced. The Fork to Farmer project will additionally help promote the farm and local economy by helping to keep consumer dollars at home in Moore County. _____ _____ **X** I acknowledge that my organization is required to provide approx. $3,500 in cash and that there is no cash award or grant to the partners selected through this application process.

NC STATE EXTENSION

P1tLab

Support applicants
Name: _Phil Werz___ Position/Title: __President and CEO_____ Organization: __Pinehurst/Southern Pines/Aberdeen Convention & Visitors Bureau_____ Extension Office ☐ **X**Tourism Dev. Authority ☐ Other entity ☐ **X** I acknowledge that my organization will support of this application.
Name: Charles Hammond__ Position/Title: _Agricultural Advisor_____ Organization: _Partners in Progress_____ Extension Office ☐ Tourism Dev. Authority ☐ **X**Other entity ☐ ☐**X** I acknowledge that my organization will support of this application.
Celebrated local chef
Name of chef: Matt Hammond/Josh Donovan_____ Name of restaurateur (if different): _____ Name of restaurant: _Ashten's, Southern Pines, NC_____
Local small farmer to be featured in the film with the chef
Farmer's name: _Ryan Olufs_ Farm: _Misty Morning Farms_____
Small farmers nominated for the local network
Farmer's name: _John Blue___ Farm: _Highlander Farm_____ Farmer's name: _Karyn Ring___Farm: Eagle's Nest Berry Farm Farmer's name: Gary Priest___ Farm: __Priest Family Farm Farm: Anna Jackson_____ Farm: __White Hill Farms_____ Farmer's name: _Sue Stovall__ Farm: _Paradox Farm Farmer's name: Laura Younts Farm: _Flint Rock Farm Farmer's name: __Ryan Olufs _ Farm: Misty Morning Ranch_____ Farmer's name: _Karen Frye___Farm: _Karefree Produce_____ Farmer's name: _Janet Dunn__ Farm: ___Dunn's Farm_____ Farmer's name: Denise Williams Farm: _Black Rock Winery & Nursey_____

Brief strategy for long term development of Fork to Farmer networks and marketing
The critical strategic goal for creating a Fork to Farmer video is to promote Moore County agritourism. The video's emphasis of focusing on local restaurants that source from local farms will help to make to consumers aware of where their food comes from and help to support the preservation of small farms by boosting consumer interest in visiting those farms that wish to engage in agritourism. The video will be one of the basic marketing tools to bring awareness of agritourism opportunities available to consumers who seek to experience on-farm activities. Most consequently, the video will make the public aware of the importance of agriculture to the vitality of local communities. The video will be widely distributed on social media outlets, the Moore County Extension, the Moore County Government, and the Moore County Visitors and Convention Bureau websites. The video will be shown to elected and public officials to garner continued sustained support of agriculture that result in beneficial county agricultural policies and ordinances. Though other marketing strategies will be deployed on an on-going basis to promote agritourism in Moore County, the video will generate the initial visibility needed to generate recognition of the small farm's role in stimulating vibrant and rural communities that value agricultural preservation. Thus, the Fork to Farmer video will initiate an agritourism campaign that will evolve into sustainable farms as public support will promote farmland protection, farms themselves will acquire a more diversified revenue stream and new and emerging farmers will have an inducement to pursue agriculture. Furthermore, the Moore County Extension Service will be available to provide education and connect local farms welcoming visitors with technical advisors who can help farmers acquire the skills and knowledge necessary to become and remain viable and profitable. Basically, the Fork to Farmer project meets the needs of Moore County farms, espouses the mission of NC Cooperative Extension, and by association the objectives of the Fork to Farmer partnership project.

Use this form to collect application information and keep it for your records.
Then submit the information through this Google form...
tinyurl.com/fork2farmerapplication

Agenda Item: XII.D.
Meeting Date: December 3, 2018

MEMORANDUM TO THE MOORE COUNTY BOARD OF COMMISSIONERS:

FROM: Laura Cockman, Interim Director, Moore County DSS

DATE: 11-27-18

SUBJECT: Moore County/DHHS MOU for 2018-2019

PRESENTER: Laura Cockman

REQUEST: I request that the Moore County Board of Commissioners approve and sign a Modification Agreement to the Memorandum of Understanding (MOU) for Fiscal Year 2018-2019 between Moore County and the North Carolina Department of Health and Human Services (DHHS). The MOU is required by law to be approved, signed and returned with signatures to DHHS. The modification agreement of the MOU is due back to DHHS by December 17, 2018.

BACKGROUND: An MOU between each county and DHHS related to DSS programmatic performance is required to be signed by Session Law 2017-41. The MOU was signed back in June, 2018 but DHHS has sent a modification agreement of the MOU for the county to sign which will modify the MOU signed earlier in the year. The MOU changes are the result of feedback from counties and information received by DHHS from county DSS Directors. The modifications include changes to several of the performance measures making them "growth" measures. Additionally DHHS has clarified that DHHS will not withhold any state or federal funding based upon county performance or place a county under corrective action during this budget year.

FINANCIAL IMPACT: There is no anticipated financial impact during this budget year to the county.

IMPLEMENTATION PLAN: The Modification Agreement to the MOU is attached for the Moore County Board of Commissioners to sign indicating intent to comply with the new performance measures to the best of the county's ability.

RECOMMENDATION SUMMARY: Motion to approve the Modification Agreement to the MOU with DHHS as required by the State and to authorize the Chair to sign the same on behalf of the Moore County Board of Commissioners.

ATTACHMENTS: Modification Agreement to the 2018-2019 County/DHHS MOU

Modification Agreement to the

MEMORANDUM OF UNDERSTANDING (FISCAL YEAR 2018-19) BETWEEN THE NORTH CAROLINA DEPARTMENT OF HEALTH AND HUMAN SERVICES AND MOORE COUNTY

The parties agree to modify the MOU as set forth below. The terms and conditions set forth in the MOU are adopted by reference and fully incorporated as if set forth herein. The terms of this Modification Agreement supersede and replace any conflicting or contrary terms of the MOU.

2.1 Default and Modification

Performance Improvement/Corrective Action: Prior to the Department exercising its authority to withhold State and/or federal funding for a failure to satisfy the mandated performance requirements or failure to comply with the terms of this MOU, the steps set forth in Attachment X will govern. For this MOU covering Fiscal Year 2018-2019, the Department will not initiate any actions set forth in Attachment X on the basis of this MOU. Nothing contained in this MOU or Attachment X shall supersede or limit the Secretary's authority to take any action otherwise set forth in N.C. Gen. Stat. § 108A-74.

12.0 Notice

The persons named below shall be the persons to whom notices provided for in this MOU shall be given. Either Party may change the person to whom notice shall be given upon written notice to the other Party. Any notice required under this MOU will only be effective if actually delivered to the parties named below. Delivery by hand, by first class mail, or by email are authorized methods to send notices.

For the Department of Health and Human Services, Division of Social Services

IF DELIVERED BY US POSTAL SERVICE	IF DELIVERED BY ANY OTHER MEANS
Michael Becketts, Assistant Secretary NC Department of Health and Human Services 2001 Mail Services Center Raleigh, NC 27699-2001	Michael Becketts NC DHHS Doretha Dix Campus, McBryde Building Phone: 919-527-6338 E-mail: Michael.Becketts@dhhs.nc.gov

14.0 Responsibilities of the County

The County hereby agrees that its responsibilities under this MOU are as follows:

(1) The County shall adhere to the mandated performance requirements for each social services program as identified in Attachments I through IX. For a County Performance Measure designated in Attachments I through IX as a Growth Measure, the County's performance will be assessed based on its achievement of this Growth Measure. The County will ultimately work towards achievement of the Standard Measure.

ATTACHMENT I — MANDATED PERFORMANCE REQUIREMENTS:
Child Welfare - CPS Assessments

	Standard Measure	County Performance Measure	Rationale and Authority
1	The County will initiate 95% of all screened-in reports within required time frames	DHHS will work with the county to identify a performance measure for FY19-20 based on the prior fiscal year's performance.	Ensure that allegations of abuse, neglect and dependency are initiated timely. The timeframes for initiating an investigation of child maltreatment are defined in state law as, immediately, within 24 hours, or within 72 hours depending on the nature and severity of the alleged maltreatment. NC General Statutes § 7B-302; 10A NCAC 70A .0105; NCDHHS Family Services Manual: Vol. 1, Chapter VIII: Child Protective Services, Section 1408 - Investigative & Family Assessments
2	For all children who were victims of maltreatment during a twelve-month period, no more than 9.1% received a subsequent finding of maltreatment	DHHS will work with the county to identify a performance measure for FY19-20 based on the prior fiscal year's performance.	Ensure that children who have been substantiated as abused, neglected or dependent are protected from further harm. National Standards for State Performance on Statewide Data Indicators established by the Children's Bureau to determine conformity with Title IV-B and IV-E of the Social Security Act and the Child and Family Services Review.

ATTACHMENT II— MANDATED PERFORMANCE REQUIREMENTS:
Child Welfare - Foster Care

	Standard Measure	County Performance Measure	Rationale and Authority
1	The County will ensure that 95% of all foster youth have face-to-face visits by the social worker each month.	DHHS will work with the county to identify a performance measure for FY19-20 based on the prior fiscal year's performance.	Ensure the ongoing safety of children and the engagement and well-being of families. Child and Family Services Improvement Act of 2006 (Public Law 109–288, section 7) amending Section 422(b) of the Social Security Act (42 USC 622(b))
2	The County will provide leadership for ensuring that 40.5% of children who enter foster care in a 12-month period are discharged to permanency within 12 months of entering foster care.	DHHS will work with the county to identify a performance measure for FY19-20 based on the prior fiscal year's performance.	Ensure that children in out-of-home placements are able to obtain safe and permanent homes as soon as possible after removal from their home. National Standards for State Performance on Statewide Data Indicators established by the Children's Bureau to determine conformity with Title IV-B and IV-E of the Social Security Act and the Child and Family Services Review.
3	The County will provide leadership for ensuring that of children who enter foster care in a 12-month period who were discharged within 12 months to reunification, kinship care, or guardianship, no more than 8.3% re-enter foster care within 12 months of their discharge.	DHHS will work with the county to identify a performance measure for FY19-20 based on the prior fiscal year's performance.	Ensure that children existing foster care are in stable homes so that they do not re-enter foster care. CFSR: Safety Outcome 1: Children are, first and foremost protected from abuse and neglect. National Standards for State Performance on Statewide Data Indicators established by the Children's Bureau to determine conformity with Title IV-B and IV-E of the Social Security Act and the Child and Family Services Review.
4	The County will provide leadership for ensuring that of all children who enter foster care in a 12-month period in the county, the rate of placement moves per 1000 days of foster care will not exceed 4.1%.	DHHS will work with the county to identify a performance measure for FY19-20 based on the prior fiscal year's performance.	Ensure that children who are removed from their homes experience stability while they are in foster care. CFSR: Permanency Outcome 1: Children have permanency and stability in their living situations. National Standards for State Performance on Statewide Data Indicators established by the Children's Bureau to determine conformity with Title IV-B and IV-E of the Social Security Act and the Child and Family Services Review.

ATTACHMENT III— MANDATED PERFORMANCE REQUIREMENTS:
Child Support

	Standard Measure	County Performance Measure	Rationale and Authority
1	80% of paternities established or acknowledged for children born out of wedlock.	DHHS will work with the county to identify the County's performance measure for FY19-20 based on the County's performance for the preceding state fiscal year	Paternity establishment is an essential component in obtaining and enforcing support orders for children. 42 USC § 652(g)(1)(A) 42 USC § 658a(b)(6)(A) NCGS 110- 129.1
2	80% of child support cases have a court order establishing support obligations.	DHHS will work with the county to identify the County's performance measure for FY19-20 based on the County's performance for the preceding state fiscal year	A court order creates a legal obligation for a noncustodial parent to provide financial support to their children. 42 USC § 652(g)(1)(A) 42 USC § 658a(b)(6)(B) NCGS 110- 129.1
3	80% of current child support paid.	DHHS will work with the county to identify the County's performance measure for FY19-20 based on the County's performance for the preceding state fiscal year	The current collections rate is an indicator for the regular and timely payment of child support obligations. 42 USC § 652(g)(1)(A) 42 USC § 658a(b)(6)(C) NCGS 110- 129.1
4	80% of cases received a payment towards arrears.	DHHS will work with the county to identify the County's performance measure for FY19-20 based on the County's performance for the preceding state fiscal year	Collection of child support has been shown to reduce child poverty rates and improve child well-being. 42 USC § 652(g)(1)(A) 42 USC § 658a(b)(6)(D) NCGS 110- 129.1

5	The county will meet its annual goal of total child support collections.	DHHS will work with the county to identify the County's performance measure for FY19-20 based on the County's performance for the preceding state fiscal year	Measuring total child support collections is an important measure of the program because it encompasses the strength of the laws, practices, and fiscal effort to determine its effectiveness. 42 USC § 652(g)(1)(A) 42 USC § 658a(b)(6)(E) NCGS 110-129.1

ATTACHMENT IV— MANDATED PERFORMANCE REQUIREMENTS:
Energy Programs

	Standard Measure	County Performance Measure	Rationale and Authority
1	The County will process 95% of Crisis Intervention Program (CIP) applications within one (1) business day for applicants with no heat or cooling source.	The County will process 95% of Crisis Intervention Program (CIP) applications within one (1) business day for applicants with no heat or cooling source.	Ensure that eligible individuals in a household without a heating or cooling source receive relief as soon as possible. 42 USC §§ 8621-8630 10A NCAC 71V
2	The County will process 95% of Crisis Intervention Program (CIP) applications within two (2) business days of the application date for applicants who have a heat or cooling source.	The County will process 95% of Crisis Intervention Program (CIP) applications within two (2) business days of the application date for applicants who have a heat or cooling source.	Ensure that eligible households who are in danger of losing a heating or cooling source receive financial assistance to avert the crisis. 42 USC §§ 8621-8630 10A NCAC 71V

ATTACHMENT V— MANDATED PERFORMANCE REQUIREMENTS:
Work First

	Standard Measure	County Performance Measure	Rationale and Authority
1	The County will collect documentation from 50% of all Work-Eligible individuals that demonstrates completion of the required number of hours of federally countable work activities.	DHHS will work with the county to identify the County's performance measure for FY19-20 based on the County's performance for the preceding state fiscal year	Ensure that all work-eligible individuals are engaged in federally countable work activities. TANF State Plan FFY 2016 - 2019 NCGS 108A-27.2(10) NCGS 108A-27.6(1) NCGS 108A-27.13(a) NCGS 108A-27.14(a)-(b)
2	The County will collect documentation from 90% of two-parent families with Work Eligible individuals that verifies that the they have completed the required number of hours of federally countable work activities.	DHHS will work with the county to identify the County's performance measure for FY19-20 based on the County's performance for the preceding state fiscal year	Ensure all work-eligible two-parent families are engaged in federally countable work activities for the required number of participation hours. TANF State Plan FFY 2016 - 2019 NCGS 108A-27.2(10) NCGS 108A-27.6(1) NCGS 108A-27.13(a) NCGS 108A-27.14(a)-(b)
3	The County will process 95% Work First applications within 45 days of receipt.	The County will process 95% Work First applications within 45 days of receipt.	Ensure that eligible families receive Work First benefits in a timely manner. TANF State Plan FFY 2016 - 2019 NCGS 108A-31
4	The County will process 95% Work First recertifications no later than the last day of the current recertification period.	The County will process 95% Work First recertifications no later than the last day of the current recertification period.	Ensure that Work First families continue to receive assistance and benefits without unnecessary interruption. TANF State Plan FFY 2016 - 2019 NCGS 108A-31

ATTACHMENT VI— MANDATED PERFORMANCE REQUIREMENTS:
Food and Nutrition Services

	Standard Measure	County Performance Measure	Rationale and Authority
1	The County will process 95% of expedited FNS applications within 4 calendar days from the date of application.	The County will process 95% of expedited FNS applications within 4 calendar days from the date of application.	Ensure all expedited FNS applications are processed within required timeframes. 7 CFR § 273.2 FNS Manual: Section 315 FNS Administrative Letter 1-2015
2	The County will process 95% of regular FNS applications within 25 days from the date of application.	The County will process 95% of regular FNS applications within 25 days from the date of application.	Ensure all regular FNS applications are processed within required timeframes. 7 CFR § 273.2 FNS Manual: Section 315 FNS Administrative Letter1-2015
3	The County will ensure that 95% of FNS recertifications are processed on time, each month.	The County will ensure that 95% of FNS recertifications are processed on time, each month.	Ensure that eligible families have their recertification benefits processed in a timely manner without interruption. 7 CFR § 273.14
4	The County will ensure that 90% of Program Integrity claims are established within 180 days of the date of discovery.	The County will ensure that 90% of Program Integrity claims are established within 180 days of the date of discovery.	Ensure allegations of fraud are addressed promptly. 7 CFR § 273.18

ATTACHMENT VII— MANDATED PERFORMANCE REQUIREMENTS:
Adult Protective Services (APS)

	Standard Measure	County Performance Measure	Rationale and Authority
1	The County will complete 95% of APS evaluations involving allegations of abuse or neglect within 30 days of the report.	DHHS will work with the county to identify the County's performance measure for FY19-20 based on the County's performance for the preceding state fiscal year	Responding quickly to allegations of adult maltreatment is essential to case decision-making to protect the adult. State law requires that a prompt and thorough evaluation is made of all reports of adult maltreatment. NCGS 108A-103
2	The County will complete 85% of APS evaluations involving allegations of exploitation within 45 days of the report.	DHHS will work with the county to identify the County's performance measure for FY19-20 based on the County's performance for the preceding state fiscal year	Protecting a disabled adult from exploitation is critical to ensuring their safety and well-being. State law requires a prompt and thorough evaluation is made of all reports of adult exploitation. NCGS 108A-103

ATTACHMENT VIII— MANDATED PERFORMANCE REQUIREMENTS:
Special Assistance (SA)

	Standard Measure	County Performance Measure	Rationale and Authority
1	The County will process 85% of Special Assistance for the Aged (SAA) applications within 45 calendar days of the application date.	DHHS will work with the county to identify the County's performance measure for FY19-20 based on the County's performance for the preceding state fiscal year	Ensure eligible individuals receive supplemental payments to support stable living arrangements. Timely application processing of SAA benefits is essential to an individual's proper care and treatment. 10A NCAC 71P .0604
2	The County will process 85% of Special Assistance for the Disabled (SAD) applications within 60 calendar days of the application date.	DHHS will work with the county to identify the County's performance measure for FY19-20 based on the County's performance for the preceding state fiscal year	Ensure eligible individuals receive supplemental payments to support stable living arrangements. Timely application processing of SAD benefits is essential to an individual's proper care and treatment. 10A NCAC 71P .0604

ATTACHMENT IX— MANDATED PERFORMANCE REQUIREMENTS:
Child Care Subsidy

	Standard Measure	County Performance Measure	Rationale and Authority
1	The County will process 95% of Child Care Subsidy applications within 30 calendar days of the application date.	The County will process 95% of Child Care Subsidy applications within 30 calendar days of the application date.	Ensure that families can place their children in quality child care without undue delay. North Carolina Child Care Development Fund State Plan

ATTACHMENT X— CORRECTIVE ACTION

For this MOU covering Fiscal Year 2018-2019, the Department will not initiate any actions set forth in Attachment X on the basis of this MOU..

1. **Non-Compliance with performance requirements or terms of the MOU**
    a. In the event a County Department of Social Services (County DSS)** fails to satisfy a performance requirement for three consecutive months or fails to comply with a term of this MOU, the Department will provide the County DSS with written notification identifying the relevant performance requirement or term and how the County DSS failed to satisfy it.
    b. Upon receipt of notification, the County DSS shall promptly provide the Department with written acknowledgment of receipt.
    c. If the County DSS does not agree that it failed to satisfy the performance requirement or comply with the terms of the MOU, it shall set forth, in writing, the basis for its disagreement. If the County DSS believes its failure to adhere to a mandated performance requirement or term of this MOU is due in whole or in part upon the failure of the Department to meet any of its responsibilities under this MOU or other external factors (i.e., limited court dates, continuances, etc.), the County DSS shall set forth in writing how the failure of the Department or external factors to meet its responsibility to the County DSS contributed to the inability of the County DSS to meet the mandated performance standard or other term of this MOU. This notice shall be received by the Department, along with all supporting documentation, within 10 business days of the County DSS' receipt of the Department's written notification of non-compliance.
    d. If written notice is received in accordance with subsection (c) of this section, the Department will provide the appropriate division director with the all documentation received. Following a review of all documentation, the division director will provide the county with a decision to proceed in developing the performance improvement plan or to rescind the notice of non-compliance.
2. **Performance Improvement Plan**
    a. The County DSS and Department shall work together to develop a performance improvement plan to address the non-compliance. The Parties will consider and address the County DSS's written disagreement with the identified non-compliance, if any, in the development of the performance improvement plan.
    b. The performance improvement plan shall include, at a minimum:
        i. The role and responsibility of DHHS in providing support to the County DSS to address the non-compliance.
        ii. The specific actions the County DSS will take to address the non-compliance and ensure ongoing compliance.
    c. The performance improvement plan shall be signed by the Department and the County DSS Director. A copy of the performance improvement plan will be sent to the chair of the DSS Governing Board.
3. **Continued Non-Compliance**
    a. In the event a County DSS continues to fail to satisfy a performance requirement or comply with the terms of the MOU for an extended period of time and is not meeting the terms of the performance improvement plan, the County DSS and the Department will enter into a corrective action plan, not to exceed a period of twelve months. An extended

period of time is defined as three consecutive months, or five months out of a twelve-month period measured beginning with the first month after which the performance improvement plan is signed.

b. The corrective action plan shall include, at a minimum:
    i. A strategy to ensure regular supervisory oversight of the social services program at issue;
    ii. A detailed strategy to ensure the issue central to the non-compliance is addressed and corrected;
    iii. A strategy to ensure program and case documentation is both sufficient and completed within time frames prescribed by law, rule or policy; and
    iv. A plan for the continuous review of the corrective activities by both the County Director of Social Services, the County DSS Governing Board, and the Department.

c. The corrective action plan will be signed by the Department and the County DSS Director. A copy of the corrective action plan will be sent to the Chair of the DSS Governing Board, the County Manager, and the Chair of the Board of County Commissioners.

4. Failure to Complete Corrective Action Plan/Urgent Circumstances

a. In the event a County DSS fails to complete the corrective action plan or otherwise fails to comply with the terms of the corrective action plan, the Department may exercise its authority under the law, and this MOU, to withhold federal and/or state funding.

b. In circumstances of continuous extended non-compliance or other urgent circumstances, the Secretary may also exercise her statutory authority to assume control of service delivery in the County pursuant to N.C.G.S. 108A-74.

** In the event the performance requirement or term of the MOU falls outside of the authority of the County DSS, the notification of non-compliance will be sent to the County, and all subsequent steps contained herein shall be followed by the County.

Effective Date: This Modification Agreement shall become effective upon the date of execution by both parties and shall continue in effect until June 30, 2019.

Signature Warranty: Each individual signing below warrants that he or she is duly authorized by the party to sign this Modification Agreement and to bind the party to the terms and conditions of this Modification Agreement and the MOU.

Moore County

BY:_____
Name

TITLE:_____

DATE:_____

North Carolina Department of Health and Human Services

BY:_____
Name

TITLE:_____

DATE:_____

Agenda Item: XII.E.
Meeting Date: December 3, 2018

MEMORANDUM TO THE MOORE COUNTY BOARD OF COMMISSIONERS:

FROM: **Captain William Flint**

DATE: **December 3, 2018**

SUBJECT: **Amendment to RFP**

REQUEST:

We are requesting that the Board of Commissioners waive the current RFP bid award standard as listed in our County procurement policy for service contracts. And, request an award to the best possible solution based on the below evaluation criteria:

Experience	– 20%
Support	– 20%
References	– 20%
Features	– 20%
Overall Package	– 20%.

BACKGROUND:

The Moore County Detention Center's current contracts with Legacy, Osasis, and Renovo are set to expire at the end of this fiscal year. We are currently in the process of receiving Requests for Proposals for an all-inclusive contract.

The Moore County Detention Center wants to combine all inmate services into one experienced service provider that can provide the best support and features to the County. This will consolidate inmate phones, commissary, and video visitation into one contract.

FINANCIAL IMPACT:

This is a renvenue item for the county.

IMPLEMENTATION PLAN:

If approved, the contract services for inmate video visitation, commissary, and telephone will be awarded to the best overall package provider.

RECOMMENDATION SUMMARY:

Sheriff Fields is recommending that the Board approve this amendment.

Agenda Item: XII.F.
Meeting Date: 12/3/2018

MEMORANDUM TO THE MOORE COUNTY BOARD OF COMMISSIONERS:

FROM: **D. Bryan Phillips**

DATE: **22 October 2018**

SUBJECT: **2018 Fire Code Adoption**

PRESENTER: D. Bryan Phillips

REQUEST:
Request to abolish the 2009 International Fire Code, 2012 North Carolina Amendments and adopt the 2015 International Fire Code with 2018 North Carolina Amendments.

BACKGROUND:
For the purpose of prescribing regulations governing conditions hazardous to life and property from fire or explosion, the Moore County Board of Commissioners adopted a certain code known as the North Carolina Fire Code, as approved by the North Carolina Building Code Council and shall include subsequent amendments that are adopted pursuant to state law. An official copy of the code shall be filed in the office of the fire marshal. The code is adopted and incorporated as if fully set forth at length in this article, and the provisions thereof shall be controlling in all areas of the county not governed by a city or town, and as otherwise provided for through agreements with participating municipalities within the county. (Moore County Public Safety Ord. of 1-19-16)

FINANCIAL IMPACT:
None

IMPLEMENTATION PLAN:
Adopt the 2015 International Fire Code, with 2018 North Carolina Amendments and Appendixes.

RECOMMENDATION SUMMARY:
Make a motion to adopt the Resolutions for the 2015 International Fire Code, with 2018 North Carolina Amendments and following Appendixes:
Appendix B – Fire-Flow Requirements for Buildings
Appendix C – Fire Hydrant Location and Distribution
Appendix D – Fire Apparatus Access Roads
Appendix E – Hazard Categories
Appendix F – Hazard Ranking
Appendix G – Cryogenic Fluids – Weight and Volume Equivalents
Appendix H – Hazardous Materials Management Plan (HMMP) and Hazardous Materials Inventory Statement (HMIS) Instruction
Appendix J – Building Information Sign Appendix

ATTACHMENTS:
Appendixes
Resolution

Resolution Adopting the 2018 North Carolina State Building Code: 2018 Fire Code Appendixes

WHEREAS, For the purpose of prescribing regulations governing conditions hazardous to life and property from fire or explosion, the Moore County Board of Commissioners adopted a certain code known as the North Carolina Fire Code, as approved by the North Carolina Building Code Council and shall include subsequent amendments that are adopted pursuant to state law. An official copy of the code shall be filed in the office of the fire marshal. The code is adopted and incorporated as if fully set forth at length in this article, and the provisions thereof shall be controlling in all areas of the county not governed by a city or town, and as otherwise provided for through agreements with participating municipalities within the county. (Moore County Public Safety Ord. of 1-19-16)

WHEREAS, the North Carolina State Building Code Council has abolished use of the 2009 edition of the International Fire Code as enacted and published by the 2012 North Carolina Building Code Council- Fire Code and has chosen to enforce the 2015 edition of the International Fire Code, with the 2018 North Carolina Amendments as enacted and published by the International Code Council; and,

WHEREAS, County Commissioners now desire to act and this amendment and move to modify the Fire Prevention Code, Fees, Penalties Schedule and adopt the Appendixes of the County Of Moore to implement this revision:

NOW, THEREFORE, BE IT AND IT IS HEREBY RESOLVED, that the Moore County Board of Commissioners hereby;

1. The Fire Prevention Code, Fees, Penalties Schedule, and Appendixes is hereby amended by repealing the reference and use for the 2009 edition of the International Fire Code with 2012 North Carolina Amendment and replace it with the 2015 edition of the International Fire Code, with the 2018 North Carolina Amendments.

2. The following appendixes are adopted as part of the 2015 edition of the International Fire Code with 2018 North Carolina Amendments:

Appendix B – Fire-Flow Requirements for Buildings
Appendix C – Fire Hydrant Location and Distribution
Appendix D – Fire Apparatus Access Roads
Appendix E – Hazard Categories
Appendix F – Hazard Ranking
Appendix G – Cryogenic Fluids – Weight and Volume Equivalents
Appendix H – Hazardous Materials Management Plan (HMMP) and Hazardous Materials Inventory Statement (HMIS) Instruction
Appendix J – Building Information Sign
Appendix A – Board of Appeals, **Appendix I** – Fire Protection System – Non-Compliant, **Appendix K** – Construction Requirements for Existing Ambulatory Care Facilities, **Appendix M** – High-Rise Buildings – Retroactive Automatic Sprinkler Requirements - Deleted
Appendix L – Requirements for Fire Fighter Air Replenishment Systems – Not recommended to adoption

Adopted on December 3, 2018

_____
Chairman
Moore County Board of Commissioners

ATTEST:

_____
Laura M. Williams, Clerk

APPENDIX A

BOARD OF APPEALS

Deleted.

APPENDIX B

FIRE-FLOW REQUIREMENTS FOR BUILDINGS

The provisions contained in this appendix are not mandatory unless specifically referenced in the adopting ordinance.

SECTION B101
GENERAL

B101.1 Scope. The procedure for determining fire-flow requirements for buildings or portions of buildings hereafter constructed shall be in accordance with this appendix. This appendix does not apply to structures other than buildings.

SECTION B102
DEFINITIONS

B102.1 Definitions. For the purpose of this appendix, certain terms are defined as follows:

FIRE-FLOW. The flow rate of a water supply, measured at 20 pounds per square inch (psi) (138 kPa) residual pressure, that is available for fire fighting.

FIRE-FLOW CALCULATION AREA. The floor area, in square feet (m^2), used to determine the required fire flow.

SECTION B103
MODIFICATIONS

B103.1 Decreases. The fire chief is authorized to reduce the fire-flow requirements for isolated buildings or a group of buildings in rural areas or small communities where the development of full fire-flow requirements is impractical.

B103.2 Increases. The fire chief is authorized to increase the fire-flow requirements where conditions indicate an unusual susceptibility to group fires or conflagrations. An increase shall not be more than twice that required for the building under consideration.

B103.3 Areas without water supply systems. For information regarding water supplies for fire-fighting purposes in rural and suburban areas in which adequate and reliable water supply systems do not exist, the *fire code official* is authorized to utilize NFPA 1142 or the *International Wildland-Urban Interface Code.*

SECTION B104
FIRE-FLOW CALCULATION AREA

B104.1 General. The fire-flow calculation area shall be the total floor area of all floor levels within the *exterior walls*, and under the horizontal projections of the roof of a building, except as modified in Section B104.3.

B104.2 Area separation. Portions of buildings which are separated by *fire walls* without openings, constructed in accordance with the *International Building Code*, are allowed to be considered as separate fire-flow calculation areas.

B104.3 Type IA and Type IB construction. The fire-flow calculation area of buildings constructed of Type IA and Type IB construction shall be the area of the three largest successive floors.

Exception: Fire-flow calculation area for open parking garages shall be determined by the area of the largest floor.

SECTION B105
FIRE-FLOW REQUIREMENTS FOR BUILDINGS

B105.1 One- and two-family dwellings, Group R-3 and R-4 buildings and townhouses. The minimum fire-flow and flow duration requirements for one- and two-family *dwellings*, Group R-3 and R-4 buildings and townhouses shall be as specified in Tables B105.1(1) and B105.1(2).

B105.2 Buildings other than one- and two-family dwellings, Group R-3 and R-4 buildings and townhouses. The minimum fire-flow and flow duration for buildings other than one- and two-family *dwellings*, Group R-3 and R-4 buildings and townhouses shall be as specified in Tables B105.2 and B105.1(2).

TABLE B105.1(1)
REQUIRED FIRE-FLOW FOR ONE- AND TWO-FAMILY DWELLINGS, GROUP R-3 AND R-4 BUILDINGS AND TOWNHOUSES

FIRE-FLOW CALCULATION AREA (square feet)	AUTOMATIC SPRINKLER SYSTEM (Design Standard)	MINIMUM FIRE-FLOW (gallons per minute)	FLOW DURATION (hours)
0-3,600	No automatic sprinkler system	1,000	1
3,601 and greater	No automatic sprinkler system	Value in Table B105.1(2)	Duration in Table B105.1(2) at the required fire-flow rate
0-3,600	Section 903.3.1.3 of the *International Fire Code* or Section P2904 of the *International Residential Code*	500	½
3,601 and greater	Section 903.3.1.3 of the *International Fire Code* or Section P2904 of the *International Residential Code*	½ value in Table B105.1(2)	1

For SI: 1 square foot = 0.0929 m^2, 1 gallon per minute = 3.785 L/m.

TABLE B105.1(2)
REFERENCE TABLE FOR TABLES B105.1(1) AND B105.2

FIRE-FLOW CALCULATION AREA (square feet)					FIRE-FLOW (gallons per minute)[b]	FLOW DURATION (hours)
Type IA and IB[a]	Type IIA and IIIA[a]	Type IV and V-A[a]	Type IIB and IIIB[a]	Type V-B[a]		
0-22,700	0-12,700	0-8,200	0-5,900	0-3,600	1,500	2
22,701-30,200	12,701-17,000	8,201-10,900	5,901-7,900	3,601-4,800	1,750	
30,201-38,700	17,001-21,800	10,901-12,900	7,901-9,800	4,801-6,200	2,000	
38,701-48,300	21,801-24,200	12,901-17,400	9,801-12,600	6,201-7,700	2,250	
48,301-59,000	24,201-33,200	17,401-21,300	12,601-15,400	7,701-9,400	2,500	
59,001-70,900	33,201-39,700	21,301-25,500	15,401-18,400	9,401-11,300	2,750	
70,901-83,700	39,701-47,100	25,501-30,100	18,401-21,800	11,301-13,400	3,000	3
83,701-97,700	47,101-54,900	30,101-35,200	21,801-25,900	13,401-15,600	3,250	
97,701-112,700	54,901-63,400	35,201-40,600	25,901-29,300	15,601-18,000	3,500	
112,701-128,700	63,401-72,400	40,601-46,400	29,301-33,500	18,001-20,600	3,750	
128,701-145,900	72,401-82,100	46,401-52,500	33,501-37,900	20,601-23,300	4,000	4
145,901-164,200	82,101-92,400	52,501-59,100	37,901-42,700	23,301-26,300	4,250	
164,201-183,400	92,401-103,100	59,101-66,000	42,701-47,700	26,301-29,300	4,500	
183,401-203,700	103,101-114,600	66,001-73,300	47,701-53,000	29,301-32,600	4,750	
203,701-225,200	114,601-126,700	73,301-81,100	53,001-58,600	32,601-36,000	5,000	
225,201-247,700	126,701-139,400	81,101-89,200	58,601-65,400	36,001-39,600	5,250	
247,701-271,200	139,401-152,600	89,201-97,700	65,401-70,600	39,601-43,400	5,500	
271,201-295,900	152,601-166,500	97,701-106,500	70,601-77,000	43,401-47,400	5,750	
295,901-Greater	166,501-Greater	106,501-115,800	77,001-83,700	47,401-51,500	6,000	
—	—	115,801-125,500	83,701-90,600	51,501-55,700	6,250	
—	—	125,501-135,500	90,601-97,900	55,701-60,200	6,500	
—	—	135,501-145,800	97,901-106,800	60,201-64,800	6,750	
—	—	145,801-156,700	106,801-113,200	64,801-69,600	7,000	
—	—	156,701-167,900	113,201-121,300	69,601-74,600	7,250	
—	—	167,901-179,400	121,301-129,600	74,601-79,800	7,500	
—	—	179,401-191,400	129,601-138,300	79,801-85,100	7,750	
—	—	191,401-Greater	138,301-Greater	85,101-Greater	8,000	

For SI: 1 square foot = 0.0929 m^2, 1 gallon per minute = 3.785 L/m, 1 pound per square inch = 6.895 kPa.
a. Types of construction are based on the *International Building Code*.
b. Measured at 20 psi residual pressure.

TABLE B105.2
REQUIRED FIRE-FLOW FOR BUILDINGS OTHER THAN ONE- AND TWO-FAMILY DWELLINGS, GROUP R-3 AND R-4 BUILDINGS AND TOWNHOUSES

AUTOMATIC SPRINKLER SYSTEM (Design Standard)	MINIMUM FIRE-FLOW (gallons per minute)	FLOW DURATION (hours)
No automatic sprinkler system	Value in Table B105.1(2)	Duration in Table B105.1(2)
Section 903.3.1.1 of the *International Fire Code*	25% of the value in Table B105.1(2)[a]	Duration in Table B105.1(2) at the reduced flow rate
Section 903.3.1.2 of the *International Fire Code*	25% of the value in Table B105.1(2)[b]	Duration in Table B105.1(2) at the reduced flow rate

For SI: 1 gallon per minute = 3.785 L/m.
a. The reduced fire-flow shall be not less than 1,000 gallons per minute.
b. The reduced fire-flow shall be not less than 1,500 gallons per minute.

B105.3 Water supply for buildings equipped with an automatic sprinkler system. For buildings equipped with an approved *automatic sprinkler system*, the water supply shall be capable of providing the greater of:

1. The *automatic sprinkler system* demand, including hose stream allowance.
2. The required fire-flow.

SECTION B106
REFERENCED STANDARDS

ICC	IBC—15	International Building Code	B104.2,
ICC	IFC—15	International Fire Code	Tables B105.1(1) and B105.2
ICC	IWUIC—15	International Wildland-Urban Interface Code	B103.3
ICC	IRC—15	International Residential Code	Table B105.1(1)
NFPA	1142—12	Standard on Water Supplies for Suburban and Rural Fire Fighting	B103.3

APPENDIX C

FIRE HYDRANT LOCATIONS AND DISTRIBUTION

The provisions contained in this appendix are not mandatory unless specifically referenced in the adopting ordinance.

SECTION C101
GENERAL

C101.1 Scope. In addition to the requirements of Section 507.5.1 of the *International Fire Code*, fire hydrants shall be provided in accordance with this appendix for the protection of buildings, or portions of buildings, hereafter constructed or moved into the jurisdiction.

SECTION C102
NUMBER OF FIRE HYDRANTS

C102.1 Minimum number of fire hydrants for a building. The number of fire hydrants available to a building shall be not less than the minimum specified in Table C102.1.

SECTION C103
FIRE HYDRANT SPACING

C103.1 Hydrant spacing. Fire apparatus access roads and public streets providing required access to buildings in accordance with Section 503 of the *International Fire Code* shall be provided with one or more fire hydrants, as determined by Section C102.1. Where more than one fire hydrant is required, the distance between required fire hydrants shall be in accordance with Sections C103.2 and C103.3.

C103.2 Average spacing. The average spacing between fire hydrants shall be in accordance with Table C102.1.

Exception: The average spacing shall be permitted to be increased by 10 percent where existing fire hydrants provide all or a portion of the required number of fire hydrants.

C103.3 Maximum spacing. The maximum spacing between fire hydrants shall be in accordance with Table C102.1.

SECTION C104
CONSIDERATION OF EXISTING FIRE HYDRANTS

C104.1 Existing fire hydrants. Existing fire hydrants on public streets are allowed to be considered as available to meet the requirements of Sections C102 and C103. Existing fire hydrants on adjacent properties are allowed to be considered as available to meet the requirements of Sections C102 and C103 provided that a fire apparatus access road extends between properties and that an easement is established to prevent obstruction of such roads.

TABLE C102.1
REQUIRED NUMBER AND SPACING OF FIRE HYDRANTS

FIRE-FLOW REQUIREMENT (gpm)	MINIMUM NUMBER OF HYDRANTS	AVERAGE SPACING BETWEEN HYDRANTS[a, b, c, f, g] (feet)	MAXIMUM DISTANCE FROM ANY POINT ON STREET OR ROAD FRONTAGE TO A HYDRANT[d, f, g]
1,750 or less	1	500	250
2,000-2,250	2	450	225
2,500	3	450	225
3,000	3	400	225
3,500-4,000	4	350	210
4,500-5,000	5	300	180
5,500	6	300	180
6,000	6	250	150
6,500-7,000	7	250	150
7,500 or more	8 or more[e]	200	120

For SI: 1 foot = 304.8 mm, 1 gallon per minute = 3.785 L/m.

a. Reduce by 100 feet for dead-end streets or roads.

b. Where streets are provided with median dividers that cannot be crossed by fire fighters pulling hose lines, or where arterial streets are provided with four or more traffic lanes and have a traffic count of more than 30,000 vehicles per day, hydrant spacing shall average 500 feet on each side of the street and be arranged on an alternating basis.

c. Where new water mains are extended along streets where hydrants are not needed for protection of structures or similar fire problems, fire hydrants shall be provided at spacing not to exceed 1,000 feet to provide for transportation hazards.

d. Reduce by 50 feet for dead-end streets or roads.

e. One hydrant for each 1,000 gallons per minute or fraction thereof.

f. A 50-percent spacing increase shall be permitted where the building is equipped throughout with an approved automatic sprinkler system in accordance with Section 903.3.1.1 of the *International Fire Code*.

g. A 25-percent spacing increase shall be permitted where the building is equipped throughout with an approved automatic sprinkler system in accordance with Section 903.3.1.2 or 903.3.1.3 of the *International Fire Code* or Section P2904 of the *International Residential Code*.

SECTION C105
REFERENCED STANDARDS

ICC	IFC—15	International Fire Code	C101.1, C103.1, Table C102.1
ICC	IRC—15	International Residential Code	Table C102.1

APPENDIX D

FIRE APPARATUS ACCESS ROADS

The provisions contained in this appendix are not mandatory unless specifically referenced in the adopting ordinance.

SECTION D101
GENERAL

D101.1 Scope. Fire apparatus access roads shall be in accordance with this appendix and all other applicable requirements of the *International Fire Code*.

SECTION D102
REQUIRED ACCESS

D102.1 Access and loading. Facilities, buildings or portions of buildings hereafter constructed shall be accessible to fire department apparatus by way of an *approved* fire apparatus access road with an asphalt, concrete or other *approved* driving surface capable of supporting the imposed load of fire apparatus weighing at least 75,000 pounds (34 050 kg).

SECTION D103
MINIMUM SPECIFICATIONS

D103.1 Access road width with a hydrant. Where a fire hydrant is located on a fire apparatus access road, the minimum road width shall be 26 feet (7925 mm), exclusive of shoulders (see Figure D103.1).

D103.2 Grade. Fire apparatus access roads shall not exceed 10 percent in grade.

Exception: Grades steeper than 10 percent as *approved* by the fire chief.

D103.3 Turning radius. The minimum turning radius shall be determined by the *fire code official*.

D103.4 Dead ends. Dead-end fire apparatus access roads in excess of 150 feet (45 720 mm) shall be provided with width and turnaround provisions in accordance with Table D103.4.

TABLE D103.4
REQUIREMENTS FOR DEAD-END FIRE APPARATUS ACCESS ROADS

LENGTH (feet)	WIDTH (feet)	TURNAROUNDS REQUIRED
0-150	20	None required
151-500	20	120-foot Hammerhead, 60-foot "Y" or 96-foot diameter cul-de-sac in accordance with Figure D103.1
501-750	26	120-foot Hammerhead, 60-foot "Y" or 96-foot diameter cul-de-sac in accordance with Figure D103.1
Over 750	Special approval required	

For SI: 1 foot = 304.8 mm.

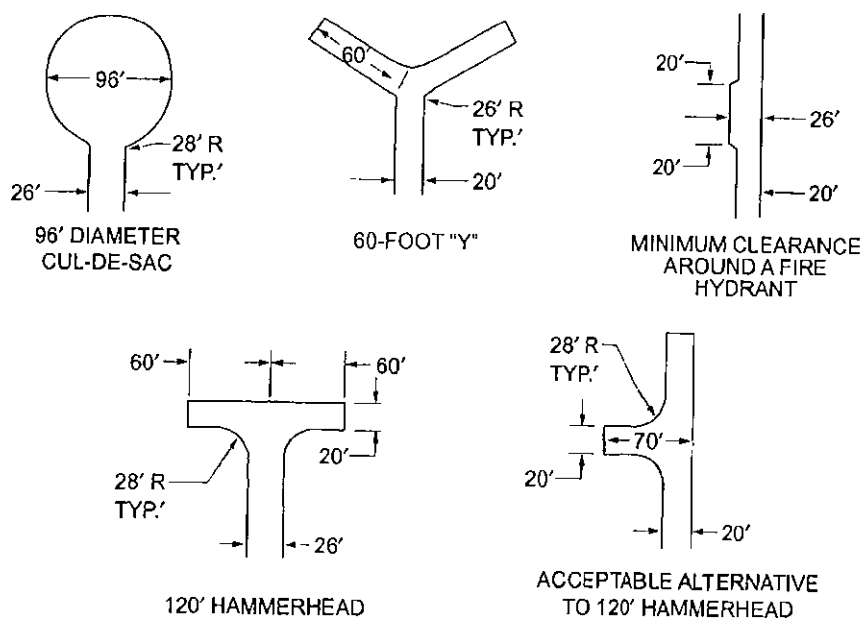

For SI: 1 foot = 304.8 mm.

FIGURE D103.1
DEAD-END FIRE APPARATUS ACCESS ROAD TURNAROUND

D103.5 Fire apparatus access road gates. Gates securing the fire apparatus access roads shall comply with all of the following criteria:

1. Where a single gate is provided, the gate width shall be not less than 20 feet (6096 mm). Where a fire apparatus road consists of a divided roadway, the gate width shall be not less than 12 feet (3658 mm).
2. Gates shall be of the swinging or sliding type.
3. Construction of gates shall be of materials that allow manual operation by one person.
4. Gate components shall be maintained in an operative condition at all times and replaced or repaired when defective.
5. Electric gates shall be equipped with a means of opening the gate by fire department personnel for emergency access. Emergency opening devices shall be *approved* by the *fire code official.*
6. Methods of locking shall be submitted for approval by the *fire code official.*
7. Electric gate operators, where provided, shall be *listed* in accordance with UL 325.
8. Gates intended for automatic operation shall be designed, constructed and installed to comply with the requirements of ASTM F2200.

D103.6 Signs. Where required by the *fire code official*, fire apparatus access roads shall be marked with permanent NO PARKING—FIRE LANE signs complying with Figure D103.6. Signs shall have a minimum dimension of 12 inches (305 mm) wide by 18 inches (457 mm) high and have red letters on a white reflective background. Signs shall be posted on one or both sides of the fire apparatus road as required by Section D103.6.1 or D103.6.2.

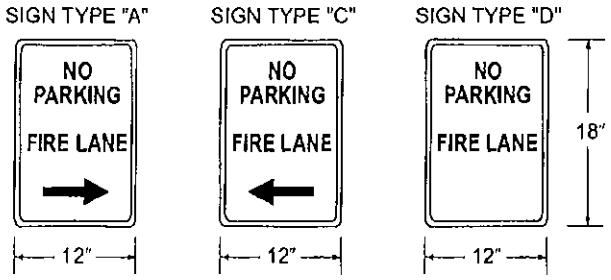

FIGURE D103.6
FIRE LANE SIGNS

D103.6.1 Roads 20 to 26 feet in width. Fire lane signs as specified in Section D103.6 shall be posted on both sides of fire apparatus access roads that are 20 to 26 feet wide (6096 to 7925 mm).

D103.6.2 Roads more than 26 feet in width. Fire lane signs as specified in Section D103.6 shall be posted on one side of fire apparatus access roads more than 26 feet wide (7925 mm) and less than 32 feet wide (9754 mm).

SECTION D104
COMMERCIAL AND INDUSTRIAL DEVELOPMENTS

D104.1 Buildings exceeding three stories or 30 feet in height. Buildings or facilities exceeding 30 feet (9144 mm) or three stories in height shall have at least two means of fire apparatus access for each structure.

D104.2 Buildings exceeding 62,000 square feet in area. Buildings or facilities having a gross *building area* of more than 62,000 square feet (5760 m^2) shall be provided with two separate and *approved* fire apparatus access roads.

Exception: Projects having a gross *building area* of up to 124,000 square feet (11 520 m^2) that have a single *approved* fire apparatus access road when all buildings are equipped throughout with *approved automatic sprinkler systems.*

D104.3 Remoteness. Where two fire apparatus access roads are required, they shall be placed a distance apart equal to not less than one half of the length of the maximum overall diagonal dimension of the lot or area to be served, measured in a straight line between accesses.

SECTION D105
AERIAL FIRE APPARATUS ACCESS ROADS

D105.1 Where required. Where the vertical distance between the grade plane and the highest roof surface exceeds 30 feet (9144 mm), approved aerial fire apparatus access roads shall be provided. For purposes of this section, the highest roof surface shall be determined by measurement to the eave of a pitched roof, the intersection of the roof to the exterior wall, or the top of parapet walls, whichever is greater.

D105.2 Width. Aerial fire apparatus access roads shall have a minimum unobstructed width of 26 feet (7925 mm), exclusive of shoulders, in the immediate vicinity of the building or portion thereof.

D105.3 Proximity to building. At least one of the required access routes meeting this condition shall be located within a minimum of 15 feet (4572 mm) and a maximum of 30 feet (9144 mm) from the building, and shall be positioned parallel to one entire side of the building. The side of the building on which the aerial fire apparatus access road is positioned shall be approved by the *fire code official.*

D105.4 Obstructions. Overhead utility and power lines shall not be located over the aerial fire apparatus access road or between the aerial fire apparatus road and the building. Other obstructions shall be permitted to be placed with the approval of the *fire code official.*

SECTION D106
MULTIPLE-FAMILY RESIDENTIAL DEVELOPMENTS

D106.1 Projects having more than 100 dwelling units. Multiple-family residential projects having more than 100 *dwelling units* shall be equipped throughout with two separate and *approved* fire apparatus access roads.

Exception: Projects having up to 200 *dwelling units* may have a single *approved* fire apparatus access road when all buildings, including nonresidential occupancies, are equipped throughout with *approved automatic sprinkler systems* installed in accordance with Section 903.3.1.1 or 903.3.1.2.

D106.2 Projects having more than 200 dwelling units. Multiple-family residential projects having more than 200 *dwelling units* shall be provided with two separate and *approved* fire apparatus access roads regardless of whether they are equipped with an *approved automatic sprinkler system.*

D106.3 Remoteness. Where two fire apparatus access roads are required, they shall be placed a distance apart equal to not less than one-half of the length of the maximum overall diagonal dimension of the property or area to be served, measured in a straight line between accesses.

SECTION D107
ONE- OR TWO-FAMILY RESIDENTIAL DEVELOPMENTS

D107.1 One- or two-family dwelling residential developments. Developments of one- or two-family dwellings where the number of *dwelling units* exceeds 30 shall be provided with two separate and *approved* fire apparatus access roads.

Exceptions:

1. Where there are more than 30 *dwelling units* on a single public or private fire apparatus access road and all *dwelling units* are equipped throughout with an *approved automatic sprinkler system* in accordance with Section 903.3.1.1, 903.3.1.2 or 903.3.1.3 of the *International Fire Code*, access from two directions shall not be required.
2. The number of *dwelling units* on a single fire apparatus access road shall not be increased unless fire apparatus access roads will connect with future development, as determined by the *fire code official.*

D107.2 Remoteness. Where two fire apparatus access roads are required, they shall be placed a distance apart equal to not less than one-half of the length of the maximum overall diagonal dimension of the property or area to be served, measured in a straight line between accesses.

SECTION D108
REFERENCED STANDARDS

ASTM	F2200—13	Standard Specification for Automated Vehicular Gate Construction	D103.5
ICC	IFC—15	International Fire Code	D101.1, D107.1
UL	325—02	Door, Drapery, Gate, Louver, and Window Operators and Systems, with Revisions through June 2013	D103.5

APPENDIX E

HAZARD CATEGORIES

This appendix is for information purposes and is not intended for adoption.

SECTION E101
GENERAL

E101.1 Scope. This appendix provides information, explanations and examples to illustrate and clarify the hazard categories contained in Chapter 50 of the *International Fire Code*. The hazard categories are based upon the DOL 29 CFR. Where numerical classifications are included, they are in accordance with nationally recognized standards.

This appendix should not be used as the sole means of hazardous materials classification.

SECTION E102
HAZARD CATEGORIES

E102.1 Physical hazards. Materials classified in this section pose a *physical hazard*.

E102.1.1 Explosives and blasting agents. The current UN/DOT classification system recognized by international authorities, the Department of Defense and others classifies all *explosives* as Class 1 materials. They are then divided into six separate divisions to indicate their relative hazard. There is not a direct correlation between the designations used by the old DOT system and those used by the current system nor is there correlation with the system (high and low) established by the Bureau of Alcohol, Tobacco, Firearms and Explosives (BATF). Table 5604.3 of the *International Fire Code* provides some guidance with regard to the current categories and their relationship to the old categories. Some items may appear in more than one division, depending on factors such as the degree of confinement or separation, by type of packaging, storage configuration or state of assembly.

In order to determine the level of hazard presented by *explosive materials*, testing to establish quantitatively their *explosive* nature is required. There are numerous test methods that have been used to establish the character of an *explosive material*. Standardized tests, required for finished goods containing *explosives* or *explosive materials* in a packaged form suitable for shipment or storage, have been established by UN/DOT and BATF. However, these tests do not consider key elements that should be examined in a manufacturing situation. In manufacturing operations, the condition and/or the state of a material may vary within the process. The in-process material classification and classification requirements for materials used in the manufacturing process may be different from the classification of the same material where found in finished goods depending on the stage of the process in which the material is found. A classification methodology must be used that recognizes the hazards commensurate with the application to the variable physical conditions as well as potential variations of physical character and type of *explosive* under consideration.

Test methods or guidelines for hazard classification of energetic materials used for in-process operations shall be *approved* by the *fire code official*. Test methods used shall be DOD, BATF, UN/DOT or other *approved* criteria. The results of such testing shall become a portion of the files of the jurisdiction and be included as an independent section of any Hazardous Materials Management Plan (HMMP) required by Section 5605.2.1 of the *International Fire Code*. Also see Section 104.7.2 of the *International Fire Code*.

Examples of materials in various Divisions are as follows:

1. Division 1.1 (High *Explosives*). Consists of *explosives* that have a mass explosion hazard. A mass explosion is one that affects almost the entire pile of material instantaneously. Includes substances that, where tested in accordance with *approved* methods, can be caused to detonate by means of a blasting cap where unconfined or will transition from *deflagration* to a *detonation* where confined or unconfined. Examples: dynamite, TNT, nitroglycerine, C-3, HMX, RDX, encased *explosives*, military ammunition.
2. Division 1.2 (Low *Explosives*). Consists of *explosives* that have a projection hazard, but not a mass explosion hazard. Examples: nondetonating encased *explosives*, military ammunition and the like.
3. Division 1.3 (Low *Explosives*). Consists of *explosives* that have a fire hazard and either a minor blast hazard or a minor projection hazard or both, but not a mass explosion hazard. The major hazard is radiant heat or violent burning, or both. Can be deflagrated where confined. Examples: smokeless powder, propellant *explosives*, display fireworks.
4. Division 1.4. Consists of *explosives* that pose a minor explosion hazard. The *explosive* effects are largely confined to the package and no projection of fragments of appreciable size or range is expected. An internal fire must not cause virtually instantaneous explosion of almost the entire contents of the package. Examples: squibs (nondetonating igniters), *explosive* actuators, *explosive* trains (low-level detonating cord).
5. Division 1.5 (Blasting Agents). Consists of very insensitive *explosives*. This division comprises substances that have a mass explosion hazard, but are so

insensitive that there is very little probability of initiation or of transition from burning to *detonation* under normal conditions of transport. Materials are not cap sensitive; however, they are mass detonating where provided with sufficient input. Examples: oxidizer and liquid fuel slurry mixtures and gels, ammonium nitrate combined with fuel oil.

6. Division 1.6. Consists of extremely insensitive articles that do not have a mass *explosive* hazard. This division comprises articles that contain only extremely insensitive detonating substances and that demonstrate a negligible probability of accidental initiation or propagation. Although this category of materials has been defined, the primary application is currently limited to military uses. Examples: Low vulnerability military weapons.

Explosives in each division are assigned a compatibility group letter by the Associate Administrator for Hazardous Materials Safety (DOT) based on criteria specified by DOTn 49 CFR. Compatibility group letters are used to specify the controls for the transportation and storage related to various materials to prevent an increase in hazard that might result if certain types of *explosives* were stored or transported together. Altogether, there are 35 possible classification codes for *explosives*, e.g., 1.1A, 1.3C, 1.4S, etc.

E102.1.2 Compressed gases. Examples include:

1. Flammable: acetylene, carbon monoxide, ethane, ethylene, hydrogen, methane. Ammonia will ignite and burn although its flammable range is too narrow for it to fit the definition of "Flammable gas."

   For binary mixtures where the hazardous component is diluted with a nonflammable gas, the mixture shall be categorized in accordance with CGA P-23.

2. Oxidizing: oxygen, ozone, oxides of nitrogen, chlorine and fluorine. Chlorine and fluorine do not contain oxygen but reaction with flammables is similar to that of oxygen.
3. *Corrosive*: ammonia, hydrogen chloride, fluorine.
4. Highly toxic: arsine, cyanogen, fluorine, germane, hydrogen cyanide, nitric oxide, phosphine, hydrogen selenide, stibine.
5. Toxic: chlorine, hydrogen fluoride, hydrogen sulfide, phosgene, silicon tetrafluoride.
6. Inert (chemically unreactive): argon, helium, krypton, neon, nitrogen, xenon.
7. Pyrophoric: diborane, dichloroborane, phosphine, silane.
8. Unstable (reactive): butadiene (unstabilized), ethylene oxide, vinyl chloride.

E102.1.3 Flammable and combustible liquids. Examples include:

1. Flammable liquids.

   Class IA liquids shall include those having *flash points* below 73°F (23°C) and having a *boiling point* at or below 100°F (38°C).

   Class IB liquids shall include those having *flash points* below 73°F (23°C) and having a *boiling point* at or above 100°F (38°C).

   Class IC liquids shall include those having *flash points* at or above 73°F (23°C) and below 100°F (38°C).

2. *Combustible liquids.*

   Class II liquids shall include those having *flash points* at or above 100°F (38°C) and below 140°F (60°C).

   Class IIIA liquids shall include those having *flash points* at or above 140°F (60°C) and below 200°F (93°C).

   Class IIIB liquids shall include those liquids having *flash points* at or above 200°F (93°C).

E102.1.4 Flammable solids. Examples include:

1. Organic solids: camphor, cellulose nitrate, naphthalene.
2. Inorganic solids: decaborane, lithium amide, phosphorous heptasulfide, phosphorous sesquisulfide, potassium sulfide, anhydrous sodium sulfide, sulfur.
3. Combustible metals (except dusts and powders): cesium, magnesium, zirconium.

E102.1.5 Combustible dusts and powders. Finely divided solids that could be dispersed in air as a dust cloud: wood sawdust, plastics, coal, flour, powdered metals (few exceptions).

E102.1.6 Combustible fibers. See Section 5202.1.

E102.1.7 Oxidizers. Examples include:

1. Gases: oxygen, ozone, oxides of nitrogen, fluorine and chlorine (reaction with flammables is similar to that of oxygen).
2. Liquids: bromine, hydrogen peroxide, nitric acid, perchloric acid, sulfuric acid.
3. Solids: chlorates, chromates, chromic acid, iodine, nitrates, nitrites, perchlorates, peroxides.

E102.1.7.1 Examples of liquid and solid oxidizers according to hazard.

Class 4: ammonium perchlorate (particle size greater than 15 microns), ammonium permanganate, guanidine nitrate, hydrogen peroxide solutions more than 91 percent by weight, perchloric acid solutions more than 72.5 percent by weight, potassium superoxide, tetranitromethane.

Class 3: ammonium dichromate, calcium hypochlorite (over 50 percent by weight), chloric acid (10 percent maximum concentration), hydrogen peroxide solutions (greater than 52 percent up to 91 percent), mono-(trichloro)-tetra-(monopotassium di-

chloro)-penta-s-triazinetrione, nitric acid, (fuming - more than 86 percent concentration), perchloric acid solutions (60 percent to 72 percent by weight), potassium bromate, potassium chlorate, potassium dichloro-s-triazinetrione (potassium dichloro-isocyanurate), potassium perchlorate (99 percent), potassium permanganate (greater than 97.5 percent), sodium bromate, sodium chlorate, sodium chlorite (over 40 percent by weight) and sodium dichloro-s-triazinetrione anhydrous (sodium dichloro-isocyanurate anhydrous).

Class 2: barium bromate, barium chlorate, barium hypochlorite, barium perchlorate, barium permanganate, 1-bromo-3-chloro-5, 5-dimethylhydantoin, calcium chlorate, calcium chlorite, calcium hypochlorite (50 percent or less by weight), calcium perchlorate, calcium permanganate, calcium peroxide (75 percent), chromium trioxide (chromic acid), copper chlorate, halane (1, 3-di-chloro-5, 5-dimethylhydantoin), hydrogen peroxide (greater than 27.5 percent up to 52 percent), lead perchlorate, lithium chlorate, lithium hypochlorite (more than 39 percent available chlorine), lithium perchlorate, magnesium bromate, magnesium chlorate, magnesium perchlorate, mercurous chlorate, nitric acid (more than 40 percent but less than 86 percent), perchloric acid solutions (more than 50 percent but less than 60 percent), potassium peroxide, potassium superoxide, silver peroxide, sodium chlorite (40 percent or less by weight), sodium perchlorate, sodium perchlorate monohydrate, sodium permanganate, sodium peroxide, sodium persulfate (99 percent), strontium chlorate, strontium perchlorate, thallium chlorate, urea hydrogen peroxide, zinc bromate, zinc chlorate and zinc permanganate.

Class 1: all inorganic nitrates (unless otherwise classified), all inorganic nitrites (unless otherwise classified), ammonium persulfate, barium peroxide, hydrogen peroxide solutions (greater than 8 percent up to 27.5 percent), lead dioxide, lithium hypochlorite (39 percent or less available chlorine), lithium peroxide, magnesium peroxide, manganese dioxide, nitric acid (40 percent concentration or less), perchloric acid solutions (less than 50 percent by weight), potassium dichromate, potassium monopersulfate (45 percent $KHSO_5$ or 90 percent triple salt), potassium percarbonate, potassium persulfate, sodium carbonate peroxide, sodium dichloro-s-triazinetrione dihydrate, sodium dichromate, sodium perborate (anhydrous), sodium perborate monohydrate, sodium perborate tetra-hydrate, sodium percarbonate, strontium peroxide, trichloro-s-triazinetrione (trichloroisocyanuric acid) and zinc peroxide.

E102.1.8 Organic peroxides. Organic peroxides contain the double oxygen or peroxy (-o-o) group. Some are flammable compounds and subject to explosive decomposition. They are available as:

1. Liquids.
2. Pastes.
3. Solids (usually finely divided powders).

E102.1.8.1 Classification of organic peroxides according to hazard.

Unclassified: Unclassified organic peroxides are capable of *detonation* and are regulated in accordance with Chapter 56 of the *International Fire Code.*

Class I: acetyl cyclohexane sulfonyl 60-65 percent concentration by weight, fulfonyl peroxide, benzoyl peroxide over 98 percent concentration, t-butyl hydroperoxide 90 percent, t-butyl peroxyacetate 75 percent, t-butyl peroxyisopropylcarbonate 92 percent, diisopropyl peroxydicarbonate 100 percent, di-n-propyl peroxydicarbonate 98 percent, and di-n-propyl peroxydicarbonate 85 percent.

Class II: acetyl peroxide 25 percent, t-butyl hydroperoxide 70 percent (with DTBP and t-BuOH diluents), t-butyl peroxybenzoate 98 percent, t-butyl peroxy-2-ethylhexanoate 97 percent, t-butyl peroxyisobutyrate 75 percent, t-butyl peroxyisopropyl-carbonate 75 percent, t-butyl peroxypivalate 75 percent, dybenzoyl peroxydicarbonate 85 percent, di-sec-butyl peroxydicarbonate 98 percent, di-sec-butyl peroxydicarbonate 75 percent, 1,1-di-(t-butylperoxy)-3,5,5-trimethyecyclohexane 95 percent, di-(2-ethythexyl) peroxydicarbonate 97 percent, 2,5-dymethyl-2-5 di (benzoylperoxy) hexane 92 percent, and peroxyacetic acid 43 percent.

Class III: acetyl cyclohexane sulfonal peroxide 29 percent, benzoyl peroxide 78 percent, benzoyl peroxide paste 55 percent, benzoyl peroxide paste 50 percent peroxide/50 percent butylbenzylphthalate diluent, cumene hydroperoxide 86 percent, di-(4-butylcyclohexyl) peroxydicarbonate 98 percent, t-butyl peroxy-2-ethylhexanoate 97 percent, t-butyl peroxyneodecanoate 75 percent, decanoyl peroxide 98.5 percent, di-t-butyl peroxide 99 percent, 1,1-di-(t-butylperoxy)3,5,5-trimethylcyclohexane 75 percent, 2,4-dichlorobenzoyl peroxide 50 percent, diisopropyl peroxydicarbonate 30 percent, 2,-5-dimethyl-2,5-di-(2-ethylhexanolyperoxy)-hexane 90 percent, 2,5-dimethyl-2,5-di-(t-butylperoxy) hexane 90 percent and methyl ethyl ketone peroxide 9 percent active oxygen diluted in dimethyl phthalate.

Class IV: benzoyl peroxide 70 percent, benzoyl peroxide paste 50 percent peroxide/15 percent water/35 percent butylphthalate diluent, benzoyl peroxide slurry 40 percent, benzoyl peroxide powder 35 percent, t-butyl hydroperoxide 70 percent, (with water diluent), t-butyl peroxy-2-ethylhexanoate 50 percent, decumyl peroxide 98 percent, di-(2-ethylhexal) peroxydicarbonate 40 percent, laurel peroxide 98 percent, p-methane hydroperoxide 52.5 percent, methyl ethyl ketone peroxide 5.5 percent active oxygen and methyl ethyl ketone peroxide 9 percent active oxygen diluted in water and glycols.

Class V: benzoyl peroxide 35 percent, 1,1-di-t-butyl peroxy 3,5,5-trimethylcyclohexane 40 percent, 2,5-di-(t-butyl peroxy) hexane 47 percent and 2,4-pentanedione peroxide 4 percent active oxygen.

E102.1.9 Pyrophoric materials. Examples include:

1. Gases: diborane, phosphine, silane.
2. Liquids: diethylaluminum chloride, di-ethylberyllium, diethylphosphine, diethylzinc, dimethylarsine, triethylaluminum etherate, tri-ethylbismuthine, triethylboron, trimethylaluminum, trimethylgallium.
3. Solids: cesium, hafnium, lithium, white or yellow phosphorous, plutonium, potassium, rubidium, sodium, thorium.

E102.1.10 Unstable (reactive) materials. Examples include:

Class 4: acetyl peroxide, dibutyl peroxide, dinitrobenzene, ethyl nitrate, peroxyacetic acid and picric acid (dry) trinitrobenzene.

Class 3: hydrogen peroxide (greater than 52 percent), hydroxylamine, nitromethane, paranitroaniline, perchloric acid and tetrafluoroethylene monomer.

Class 2: acrolein, acrylic acid, hydrazine, methacrylic acid, sodium perchlorate, styrene and vinyl acetate.

Class 1: acetic acid, hydrogen peroxide 35 percent to 52 percent, paraldehyde and tetrahydrofuran.

E102.1.11 Water-reactive materials. Examples include:

Class 3: aluminum alkyls such as triethylaluminum, isobutylaluminum and trimethylaluminum; bromine pentafluoride, bromine trifluoride, chlorodiethylaluminium and diethylzinc.

Class 2: calcium carbide, calcium metal, cyanogen bromide, lithium hydride, methyldichlorosilane, potassium metal, potassium peroxide, sodium metal, sodium peroxide, sulfuric acid and trichlorosilane.

Class 1: acetic anhydride, sodium hydroxide, sulfur monochloride and titanium tetrachloride.

E102.1.12 Cryogenic fluids. The cryogenics listed will exist as *compressed gases* where they are stored at ambient temperatures.

1. Flammable: carbon monoxide, deuterium (heavy hydrogen), ethylene, hydrogen, methane.
2. Oxidizing: fluorine, nitric oxide, oxygen.
3. *Corrosive*: fluorine, nitric oxide.
4. Inert (chemically unreactive): argon, helium, krypton, neon, nitrogen, xenon.
5. Highly toxic: fluorine, nitric oxide.

E102.2 Health hazards. Materials classified in this section pose a *health hazard*.

E102.2.1 Highly toxic materials. Examples include:

1. Gases: arsine, cyanogen, diborane, fluorine, germane, hydrogen cyanide, nitric oxide, nitrogen dioxide, ozone, phosphine, hydrogen selenide, stibine.
2. Liquids: acrolein, acrylic acid, 2-chloroethanol (ethylene chlorohydrin), hydrazine, hydrocyanic acid, 2-methylaziridine (propylenimine), 2-methyl-acetonitrile (acetone cyanohydrin), methyl ester isocyanic acid (methyl isocyanate), nicotine, tetranitromethane and tetraethylstannane (tetraethyltin).
3. Solids: (aceto) phenylmercury (phenyl mercuric acetate), 4-aminopyridine, arsenic pentoxide, arsenic trioxide, calcium cyanide, 2-chloroacetophenone, aflatoxin B, decaborane(14), mercury (II) bromide (mercuric bromide), mercury (II) chloride (*corrosive* mercury chloride), pentachlorophenol, methyl parathion, phosphorus (white) and sodium azide.

E102.2.2 Toxic materials. Examples include:

1. Gases: boron trichloride, boron trifluoride, chlorine, chlorine trifluoride, hydrogen fluoride, hydrogen sulfide, phosgene, silicon tetrafluoride.
2. Liquids: acrylonitrile, allyl alcohol, alpha-chlorotoluene, aniline, 1-chloro-2,3-epoxypropane, chloroformic acid (allyl ester), 3-chloropropene (allyl chloride), o-cresol, crotonaldehyde, dibromomethane, diisopropylamine, diethyl ester sulfuric acid, dimethyl ester sulfuric acid, 2-furaldehyde (furfural), furfural alcohol, phosphorus chloride, phosphoryl chloride (phosphorus oxychloride) and thionyl chloride.
3. Solids: acrylamide, barium chloride, barium (II) nitrate, benzidine, p-benzoquinone, beryllium chloride, cadmium chloride, cadmium oxide, chloroacetic acid, chlorophenylmercury (phenyl mercuric chloride), chromium (VI) oxide (chromic acid, solid), 2,4-dinitrotoluene, hydroquinone, mercury chloride (calomel), mercury (II) sulfate (mercuric sulfate), osmium tetroxide, oxalic acid, phenol, P-phenylenediamine, phenylhydrazine, 4-phenylmorpholine, phosphorus sulfide, potassium fluoride, potassium hydroxide, selenium (IV) disulfide and sodium fluoride.

E102.2.3 Corrosives. Examples include:

1. Acids: Examples: chromic, formic, hydrochloric (muriatic) greater than 15 percent, hydrofluoric, nitric (greater than 6 percent, perchloric, sulfuric (4 percent or more).
2. Bases (alkalis): hydroxides-ammonium (greater than 10 percent), calcium, potassium (greater than 1 percent), sodium (greater than 1 percent); certain carbonates-potassium.
3. Other *corrosives*: bromine, chlorine, fluorine, iodine, ammonia.

Note: *Corrosives* that are oxidizers, e.g., nitric acid, chlorine, fluorine; or are *compressed gases*, e.g., ammonia, chlorine, fluorine; or are water-reactive, e.g., concentrated sulfuric acid, sodium hydroxide, are *physical hazards* in addition to being *health hazards*.

SECTION E103
EVALUATION OF HAZARDS

E103.1 Degree of hazard. The degree of hazard present depends on many variables that should be considered individually and in combination. Some of these variables are as shown in Sections E103.1.1 through E103.1.5.

E103.1.1 Chemical properties of the material. Chemical properties of the material determine self reactions and reactions that could occur with other materials. Generally, materials within subdivisions of hazard categories will exhibit similar chemical properties. However, materials with similar chemical properties could pose very different hazards. Each individual material should be researched to determine its hazardous properties and then considered in relation to other materials that it might contact and the surrounding environment.

E103.1.2 Physical properties of the material. Physical properties, such as whether a material is a solid, liquid or gas at ordinary temperatures and pressures, considered along with chemical properties will determine requirements for containment of the material. Specific gravity (weight of a liquid compared to water) and vapor density (weight of a gas compared to air) are both physical properties that are important in evaluating the hazards of a material.

E103.1.3 Amount and concentration of the material. The amount of material present and its concentration must be considered along with physical and chemical properties to determine the magnitude of the hazard. Hydrogen peroxide, for example, is used as an antiseptic and a hair bleach in low concentrations (approximately 8 percent in water solution). Over 8 percent, hydrogen peroxide is classed as an oxidizer and is toxic. Above 90 percent, it is a Class 4 oxidizer "that can undergo an explosive reaction when catalyzed or exposed to heat, shock or friction," a definition that incidentally also places hydrogen peroxide over 90-percent concentration in the unstable (reactive) category. Small amounts at high concentrations could present a greater hazard than large amounts at low concentrations.

E103.1.3.1 Mixtures. Gases—toxic and highly toxic gases include those gases that have an LC_{50} of 2,000 parts per million (ppm) or less when rats are exposed for a period of 1 hour or less. To maintain consistency with the definitions for these materials, exposure data for periods other than 1 hour must be normalized to 1 hour. To classify mixtures of *compressed gases* that contain one or more toxic or highly toxic components, the LC_{50} of the mixture must be determined. Mixtures that contain only two components are binary mixtures. Those that contain more than two components are multicomponent mixtures. Where two or more hazardous substances (components) having an LC_{50} below 2,000 ppm are present in a mixture, their combined effect, rather than that of the individual substance components, must be considered. In the absence of information to the contrary, the effects of the hazards present must be considered as additive. Exceptions to the above rule could be made when there is a good reason to believe that the principal effects of the different harmful substances (components) are not additive.

For binary mixtures where the hazardous component is diluted with a nontoxic gas such as an inert gas, the LC_{50} of the mixture is estimated by use of the methodology contained in CGA P-20. The hazard zones specified in CGA P-20 are applicable for DOTn purposes and shall not be used for hazard classification.

E103.1.4 Actual use, activity or process involving the material. The definition of handling, storage and use in *closed systems* refers to materials in packages or containers. Dispensing and use in open containers or systems describes situations where a material is exposed to ambient conditions or vapors are liberated to the atmosphere. Dispensing and use in *open systems*, then, are generally more hazardous situations than handling, storage or use in *closed systems*. The actual use or process could include heating, electric or other sparks, catalytic or reactive materials and many other factors that could affect the hazard and must therefore be thoroughly analyzed.

E103.1.5 Surrounding conditions. Conditions such as other materials or processes in the area, type of construction of the structure, fire protection features (e.g., *fire walls*, sprinkler systems, alarms, etc.), occupancy (use) of adjoining areas, normal temperatures, exposure to weather, etc., must be taken into account in evaluating the hazard.

E103.2 Evaluation questions. The following are sample evaluation questions:

1. What is the material? Correct identification is important; exact spelling is vital. Check labels, MSDS, ask responsible persons, etc.
2. What are the concentration and strength?
3. What is the physical form of the material? Liquids, gases and finely divided solids have differing requirements for spill and leak control and containment.
4. How much material is present? Consider in relation to permit amounts, *maximum allowable quantity per control area* (from Group H occupancy requirements), amounts that require detached storage and overall magnitude of the hazard.
5. What other materials (including furniture, equipment and building components) are close enough to interact with the material?
6. What are the likely reactions?
7. What is the activity involving the material?
8. How does the activity impact the hazardous characteristics of the material? Consider vapors released or hazards otherwise exposed.
9. What must the material be protected from? Consider other materials, temperature, shock, pressure, etc.
10. What effects of the material must people and the environment be protected from?
11. How can protection be accomplished? Consider:

    11.1. Proper containers and equipment.

11.2. Separation by distance or construction.

11.3. Enclosure in cabinets or rooms.

11.4. Spill control, drainage and containment.

11.5. Control systems-ventilation, special electrical, detection and alarm, extinguishment, explosion venting, limit controls, exhaust scrubbers and excess flow control.

11.6. Administrative (operational) controls-signs, ignition source control, security, personnel training, established procedures, storage plans and emergency plans.

Evaluation of the hazard is a strongly subjective process; therefore, the person charged with this responsibility must gather as much relevant data as possible so that the decision will be objective and within the limits prescribed in laws, policies and standards.

It could be necessary to cause the responsible persons in charge to have tests made by qualified persons or testing laboratories to support contentions that a particular material or process is or is not hazardous. See Section 104.7.2 of the *International Fire Code*.

SECTION E104
REFERENCED STANDARDS

CGA (2009)	P-20—	Standard for Classification of Toxic Mixtures	E103.1.3.1
CGA (2008)	P-23—	Standard for Categorizing Gas Mixtures Containing Flammable and Nonflammable Components	E102.1.2
ICC	IFC—15	International Fire Code	E101.1, E102.1.1, E102.1.8.1, E103.2

APPENDIX F

HAZARD RANKING

The provisions contained in this appendix are not mandatory unless specifically referenced in the adopting ordinance.

SECTION F101
GENERAL

F101.1 Scope. Assignment of levels of hazards to be applied to specific hazard classes as required by NFPA 704 shall be in accordance with this appendix. The appendix is based on application of the degrees of hazard as defined in NFPA 704 arranged by hazard class as for specific categories defined in Chapter 2 of the *International Fire Code* and used throughout.

F101.2 General. The hazard rankings shown in Table F101.2 have been established by using guidelines found within NFPA 704. As noted in Section 4.2 of NFPA 704, there could be specific reasons to alter the degree of hazard assigned to a specific material; for example, ignition temperature, flammable range or susceptibility of a container to rupture by an internal combustion explosion or to metal failure while under pressure or because of heat from external fire. As a result, the degree of hazard assigned for the same material can vary when assessed by different people of equal competence.

The hazard rankings assigned to each class represent reasonable minimum hazard levels for a given class based on the use of criteria established by NFPA 704. Specific cases of use or storage may dictate the use of higher degrees of hazard in certain cases.

SECTION F102
REFERENCED STANDARDS

ICC	IFC—15	International Fire Code	F101.1
NFPA	704—12	Identification of the Hazards of Materials for Emergency Response	F101.1, F101.2

TABLE F101.2
FIRE FIGHTER WARNING PLACARD DESIGNATIONS BASED ON HAZARD CLASSIFICATION CATEGORIES

HAZARD CATEGORY	DESIGNATION
Combustible liquid II	F2
Combustible liquid IIIA	F2
Combustible liquid IIIB	F1
Combustible dust	F4
Combustible fiber	F3
Cryogenic flammable	F4, H3
Cryogenic oxidizing	OX, H3
Explosive	R4
Flammable solid	F2
Flammable gas (gaseous)	F4
Flammable gas (liquefied)	F4
Flammable liquid IA	F4
Flammable liquid IB	F3
Flammable liquid IC	F3
Organic peroxide, UD	R4
Organic peroxide I	F4, R3
Organic peroxide II	F3, R3
Organic peroxide III	F2, R2
Organic peroxide IV	F1, R1
Organic peroxide V	None
Oxidizing gas (gaseous)	OX
Oxidizing gas (liquefied)	OX
Oxidizer 4	OX4
Oxidizer 3	OX3
Oxidizer 2	OX2
Oxidizer 1	OX1
Pyrophoric gases	F4
Pyrophoric solids, liquids	F3
Unstable reactive 4D	R4
Unstable reactive 3D	R4
Unstable reactive 3N	R2
Unstable reactive 2	R2
Unstable reactive 1	None
Water reactive 3	W3
Water reactive 2	W2
Corrosive	H3, COR
Toxic	H3
Highly toxic	H4

F—Flammable category.
R—Reactive category.
H—Health category.
W—Special hazard: water reactive.
OX—Special hazard: oxidizing properties.
COR—Corrosive.
UD—Unclassified detonable material.
4D—Class 4 detonable material.
3D—Class 3 detonable material.
3N—Class 3 nondetonable material.

APPENDIX G

CRYOGENIC FLUIDS—WEIGHT AND VOLUME EQUIVALENTS

This appendix is for information purposes and is not intended for adoption.

SECTION G101
GENERAL

G101.1 Scope. This appendix is used to convert from liquid to gas for *cryogenic fluids*.

G101.2 Conversion. Table G101.2 shall be used to determine the equivalent amounts of *cryogenic fluids* in either the liquid or gas phase.

G101.2.1 Use of the table. To use Table G101.2, read horizontally across the line of interest. For example, to determine the number of cubic feet of gas contained in 1.0 gallon (3.785 L) of liquid argon, find 1.000 in the column entitled "Volume of Liquid at Normal *Boiling Point*." Reading across the line under the column entitled "Volume of Gas at NTP" (70°F and 1 atmosphere/14.7 psia), the value of 112.45 cubic feet (3.184 m^3) is found.

G101.2.2 Other quantities. If other quantities are of interest, the numbers obtained can be multiplied or divided to obtain the quantity of interest. For example, to determine the number of cubic feet of argon gas contained in a volume of 1,000 gallons (3785 L) of liquid argon at its normal *boiling point*, multiply 112.45 by 1,000 to obtain 112,450 cubic feet (3184 m^3).

TABLE G101.2
WEIGHT AND VOLUME EQUIVALENTS FOR COMMON CRYOGENIC FLUIDS

CRYOGENIC FLUID	WEIGHT OF LIQUID OR GAS		VOLUME OF LIQUID AT NORMAL BOILING POINT		VOLUME OF GAS AT NTP	
	Pounds	Kilograms	Liters	Gallons	Cubic feet	Cubic meters
Argon	1.000	0.454	0.326	0.086	9.67	0.274
	2.205	1.000	0.718	0.190	21.32	0.604
	3.072	1.393	1.000	0.264	29.71	0.841
	11.628	5.274	3.785	1.000	112.45	3.184
	10.340	4.690	3.366	0.889	100.00	2.832
	3.652	1.656	1.189	0.314	35.31	1.000
Helium	1.000	0.454	3.631	0.959	96.72	2.739
	2.205	1.000	8.006	2.115	213.23	6.038
	0.275	0.125	1.000	0.264	26.63	0.754
	1.042	0.473	3.785	1.000	100.82	2.855
	1.034	0.469	3.754	0.992	100.00	2.832
	0.365	0.166	1.326	0.350	35.31	1.000
Hydrogen	1.000	0.454	6.409	1.693	191.96	5.436
	2.205	1.000	14.130	3.733	423.20	11.984
	0.156	0.071	1.000	0.264	29.95	0.848
	0.591	0.268	3.785	1.000	113.37	3.210
	0.521	0.236	3.339	0.882	100.00	2.832
	0.184	0.083	1.179	0.311	35.31	1.000
Oxygen	1.000	0.454	0.397	0.105	12.00	0.342
	2.205	1.000	0.876	0.231	26.62	0.754
	2.517	1.142	1.000	0.264	30.39	0.861
	9.527	4.321	3.785	1.000	115.05	3.250
	8.281	3.756	3.290	0.869	100.00	2.832
	2.924	1.327	1.162	0.307	35.31	1.000
Nitrogen	1.000	0.454	0.561	0.148	13.80	0.391
	2.205	1.000	1.237	0.327	30.43	0.862
	1.782	0.808	1.000	0.264	24.60	0.697
	6.746	3.060	3.785	1.000	93.11	2.637
	7.245	3.286	4.065	1.074	100.00	2.832
	2.558	1.160	1.436	0.379	35.31	1.000
LNG[a]	1.000	0.454	1.052	0.278	22.968	0.650
	2.205	1.000	2.320	0.613	50.646	1.434
	0.951	0.431	1.000	0.264	21.812	0.618
	3.600	1.633	3.785	1.000	82.62	2.340
	4.356	1.976	4.580	1.210	100.00	2.832
	11.501	5.217	1.616	0.427	35.31	1.000

For SI: 1 pound = 0.454 kg, 1 gallon = 3.785 L, 1 cubic foot = 0.02832 m^3, °C = [(°F)-32]/1.8, 1 pound per square inch atmosphere = 6.895 kPa.

a. The values listed for liquefied natural gas (LNG) are "typical" values. LNG is a mixture of hydrocarbon gases, and no two LNG streams have exactly the same composition.

APPENDIX H

HAZARDOUS MATERIALS MANAGEMENT PLAN (HMMP) AND HAZARDOUS MATERIALS INVENTORY STATEMENT (HMIS) INSTRUCTIONS

The provisions contained in this appendix are adopted as part of this code.

SECTION H101
HMMP

H101.1 Part A (See Example Format in Figure 1).

1. Fill out items and sign the declaration.
2. Part A of this section is required to be updated and submitted annually, or within 30 days of a process or management change.

H101.2 Part B–General Facility Description/Site Plan (See Example Format in Figure 2).

1. Provide a site plan on $8^1/_2$ by 11 inch (215 mm by 279 mm) paper, showing the locations of all buildings, structures, outdoor chemical control or storage and use areas, parking lots, internal roads, storm and sanitary sewers, wells and adjacent property uses. Indicate the approximate scale, northern direction and date the drawing was completed.

H101.3 Part C–Facility Storage Map–Confidential Information (See Example Format in Figure 3).

1. Provide a floor plan of each building identified on the site plan as containing hazardous materials on $8^1/_2$-inch by 11-inch (215 mm by 279 mm) paper, identifying the northern direction, and showing the location of each storage and use area.
2. Identify storage and use areas, including hazard waste storage areas.
3. Show the following:
   - 3.1. Accesses to each storage and use area.
   - 3.2. Location of emergency equipment.
   - 3.3. Location where liaison will meet emergency responders.
   - 3.4. Facility evacuation meeting point locations.
   - 3.5. The general purpose of other areas within the building.
   - 3.6. Location of all aboveground and underground tanks to include sumps, vaults, below-grade treatment systems, piping, etc.
   - 3.7. Show hazard classes in each area.
   - 3.8. Show locations of all Group H occupancies, control areas, and exterior storage and use areas.
   - 3.9. Show emergency exits.

SECTION H102
HMIS

H102.1 Inventory statement contents.

1. HMIS Summary Report (see Example Format in Figure 4).
   - 1.1. Complete a summary report for each control area and Group H occupancy.
   - 1.2. The storage summary report includes the HMIS Inventory Report amounts in storage, use-closed and use-open conditions.
   - 1.3. Provide separate summary reports for storage, use-closed and use-open conditions.
   - 1.4. IBC/IFC Hazard Class.
   - 1.5. Inventory Amount. [Solid (lb), Liquid (gal), Gas (cu ft, gal or lbs)].
   - 1.6. IBC/IFC Maximum Allowable Quantity per control area (MAQ). (If applicable, double MAQ for sprinkler protection and/or storage in cabinets. For wholesale and retail sales occupancies, go to Tables 5003.11.1 and 5704.3.4.1 of the *International Fire Code* for MAQs.).
2. HMIS Inventory Report (see Example Format in Figure 5).
   - 2.1. Complete an inventory report by listing products by location.
   - 2.2. Product Name.
   - 2.3. Components. (For mixtures specify percentages of major components if available.)
   - 2.4. Chemical Abstract Service (CAS) Number. (For mixtures list CAS Numbers of major components if available.)
   - 2.5. Location. (Identify the control area or, if it is a Group H occupancy, provide the classification, such as H-2, H-3, etc.)
   - 2.6. Container with a capacity of greater than 55 gallons (208 L). (If product container, vessel or tank could exceed 55 gallons, indicate yes in column.)
   - 2.7. Hazard Classification. (List applicable classifications for each product.)
   - 2.8. Stored. (Amount of product in storage conditions.)

2.9. Closed. (Amount of product in use-closed systems.)

2.10. Open. (Amount of product in use-open systems.)

Facilities that have prepared, filed and submitted a Tier II Inventory Report required by the U.S. Environmental Protection Agency (USEPA) or required by a state that has secured USEPA approval for a similar form shall be deemed to have complied with this section.

SECTION H103
EMERGENCY PLAN

1. Emergency Notification. (See Example Format in Figure 6.)
2. Where OSHA or state regulations require a facility to have either an Emergency Action Plan (EAP) or an Emergency Response Plan (ERP), the EAP or ERP shall be included as part of the HMMP.

SECTION H104
REFERENCED STANDARDS

ICC	IBC—15	International Building Code	H102.1
ICC	IFC—15	International Fire Code	H102.1

FIGURE 1
HAZARDOUS MATERIALS MANAGEMENT PLAN
SECTION I: FACILITY DESCRIPTION

1. Business Name: _____ Phone: _____
   Address: _____

2. Person Responsible for the Business
   Name: _____ Title: _____ Phone: _____

3. Emergency Contacts:

Name:	Title:	Home Number:	Work Number:

4. Person Responsible for the Application/Principal Contact:
   Name: _____ Title: _____ Phone: _____

5. Principal Business Activity:
   _____
   _____
   _____

6. Number of Employees: _____

7. Number of Shifts: _____
   a. Number of Employees per Shift:
   _____
   _____
   _____

B. Hours of Operation: _____

FIGURE 2
HAZARDOUS MATERIALS MANAGEMENT PLAN SECTION I: FACILITY DESCRIPTION

FIGURE 3
HAZARDOUS MATERIALS MANAGEMENT PLAN SECTION I: FACILITY DESCRIPTION PART C—FACILITY MAP

Business Name	Date
Address	Page of

FIGURE 4
SECTION II—HAZARDOUS MATERIALS INVENTORY STATEMENT (HMIS) HMIS SUMMARY REPORT[a] (Storage[b] Conditions)[c]

IBC/IFC HAZARD CLASS	HAZARD CLASS	INVENTORY AMOUNT			IBC/IFC MAXIMUM ALLOWABLE QUANTITY[d]		
	(Abbrev)	Solid (lb)	Liquid (gal)	Gas (cu ft, gal, lb)	Solid (lb)	Liquid (gal)	Gas (cu ft, gal, lb)
Combustible Liquid	C2		5			120	
	C3A					330	
	C3B		6			13,200	
Combustible Fiber	Loose/Baled						
Cryogenics, Flammable	Cryo-Flam					45	
Cryogenic, Oxidizing	Cryo-OX					45	
Flammable Gas	FLG						
(Gaseous)				150			1,000
(Liquefied)						30	
Flammable Liquid	F1A					30	
	F1B & F1C		5			120	
Combination (1A, 1B, 1C)			5			120	
Flammable Solid	FLS				125		
Organic Peroxide	OPU				0		
	OP1				5		
	OP2				50		
	OP3				125		
	OP4				NL		
	OP5				NL		
Oxidizer	OX4				0		
	OX3				10		
	OX2				250		
	OX1				4,000		

a. Complete a summary report for each control area and Group H occupancy.
b. Storage = storage + use-closed + use-open systems.
c. Separate reports are required for use-closed and use-open systems.
d. Include increases for sprinklefrs or storage in cabinets, if applicable.
(This is an example; add additional hazard classes as needed.)

FIGURE 5
SECTION II — HAZARDOUS MATERIALS INVENTORY STATEMENT (HMIS) HMIS INVENTORY REPORT
(Sort Products Alphabetically by Location of Product and then Alphabetically by Product Name)

Product Name (Components)[c]	CAS Number	Location[a]	Container > 55 gal[b]	Haz Class 1	Haz Class 2	Haz Class 3	Stored (lbs)	Stored (gal)	Stored (gas)[d]	Closed (lbs)	Closed (gal)	Closed gas[d]	Open (lbs)	Open (gal)
ACETYLENE (Acetylene gas)	74-86-2	Control Area 1		FLG	UR2				150					
BLACK AEROSOL SPRAY PAINT (Mixture)	Mixture	Control Area 1		A-L3			24							
GASOLINE, UNLEADED (Gasoline-Mixture) Methyl-t-Butyl-Ether-15% Diisopropyl Ether-7% Ethanol-11% Toluene-12% Xylene-11%	8006-61-9 1634-04-4 108-20-3 64-17-5 108-88-3 1330-20-7	Control Area 1		F1B				5						
MOTOR OIL-10W40 (Hydrotreated Heavy Paraffinic Distillate-85%; Additives-20%)	64742-54-7 Mixture	Control Area 1		C3B				3						
DIESEL (Diesel-99-100%; Additives)	68476-34-6 Proprietary	Control Area 2	Yes	C2				225						
TRANSMISSION FLUID (Oil-Solvent-Neutral; Performance Additives)	64742-65-0	Control Area 2		C3B				3						
OXYGEN, GAS (Oxygen)	7782-44-7	H-3		OXG					5,000					

a. Identify the control area or, if it is a Group H occupancy, provide the classification, such as H-2, H-3, etc.
b. If the product container, vessel or tank could exceed 55 gallons, indicate yes in the column.
c. Specify percentages of main components if available.
d. In cubic feet, gallons or pounds.
(This is an example; add additional hazard classes as needed.)

FIGURE 6
HAZARDOUS MATERIALS MANAGEMENT PLAN
SECTION III: EMERGENCY PLAN

1. In the event of an emergency, the following shall be notified:
   a. Facility Liaison

Name	Title	Home Number	Work Number

   b. Agency

Agency	Contact	Phone Number
Fire Department		
LEPC		
Other		

APPENDIX I

FIRE PROTECTION SYSTEMS—NONCOMPLIANT CONDITIONS

Deleted.

APPENDIX J

BUILDING INFORMATION SIGN

The provisions contained in this appendix are not mandatory unless specifically referenced in the adopting ordinance.

SECTION J101
GENERAL

J101.1 Scope. New buildings shall have a building information sign(s) that shall comply with Sections J101.1.1 through J101.7. Existing buildings shall be brought into conformance with Sections J101.1 through J101.9 when one of the following occurs:

1. The fire department conducts an annual inspection intended to verify compliance with this section, or any required inspection.
2. When a change in use or occupancy has occurred.

Exceptions:

1. Group U occupancies.
2. One- and two-family dwellings.

J101.1.1 Sign location. The building information sign shall be placed at one of the following locations:

1. Upon the entry door or sidelight at a minimum height of 42 inches (1067 mm) above the walking surface on the address side of the building or structure.
2. Upon the exterior surface of the building or structure on either side of the entry door, not more than 3 feet (76 mm) from the entrance door, at a minimum height of 42 inches (1067 mm) above the walking surface on the address side of the building or structure.
3. Conspicuously placed inside an enclosed entrance lobby, on any vertical surface within 10 feet (254 mm) of the entrance door at a minimum height of 42 inches (1067 mm) above the walking surface.
4. Inside the building's fire command center.
5. On the exterior of the fire alarm control unit or on the wall immediately adjacent to the fire alarm control unit door where the alarm panel is located in the enclosed main lobby.

J101.1.2 Sign features. The building information sign shall consist of all of the following:

1. White reflective background with red letters.
2. Durable material.
3. Numerals shall be Roman or Latin numerals, as required, or alphabet letters.
4. Permanently affixed to the building or structure in an approved manner.

J101.1.3 Sign shape. The building information sign shall be a Maltese cross as shown in Figure J101.1.3.

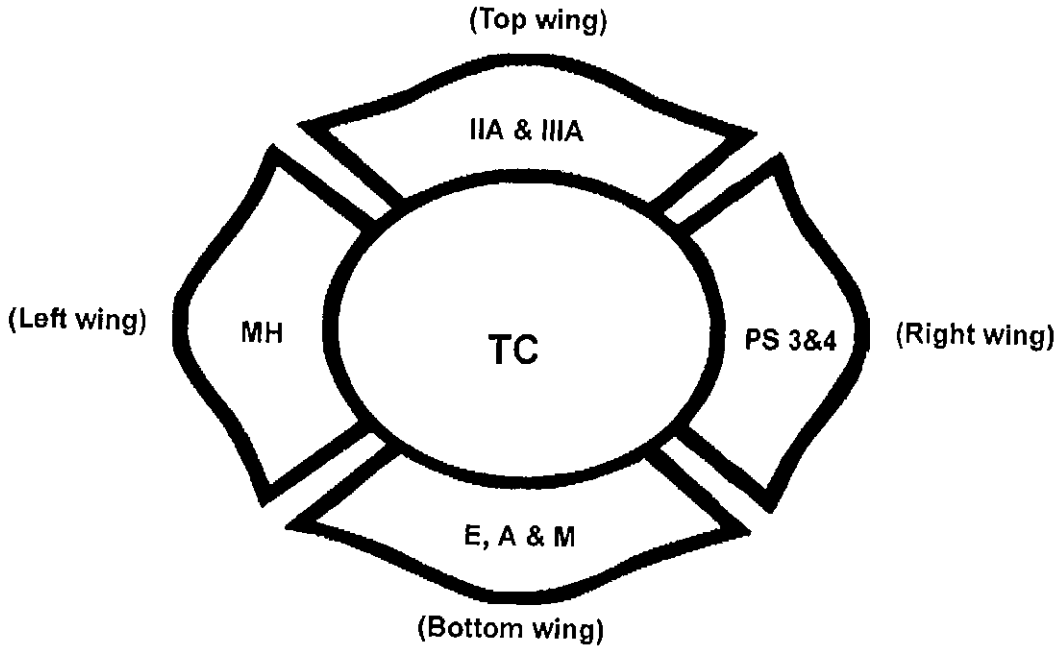

FIGURE J101.1.3
EXAMPLE OF COMPLETED BUILDING INFORMATION SIGN

J101.1.4 Sign size and lettering. The minimum size of the building information sign and lettering shall be in accordance with the following:

1. The width and height shall be 6 inches by 6 inches (152 mm by 152 mm).
2. The height or width of each Maltese cross wing area shall be $1^1/_8$ inches (29 mm) and have a stroke width of $^1/_2$ inch (13 mm).
3. The center of the Maltese cross, a circle or oval, shall be 3 inches (76 mm) in diameter and have a stroke width of $^1/_2$ inch (6 mm).
4. All Roman numerals and alphabetic designations, shall be $1^1/_4$ inch (32 mm) height and have a stroke width of $^1/_4$ inch (6 mm).

J101.2 Sign designations. Designations shall be made based upon the construction type, content, hazard, *fire protection systems*, life safety and occupancy. Where multiple designations occur within a classification category, the designation used shall be based on the greatest potential risk.

J101.3 Construction type (top wing). The construction types shall be designated by assigning the appropriate Roman numeral, and letter, placed inside the top wing of the Maltese cross. The hourly rating provided is for the structural framing in accordance with Table 601 of the *International Building Code*,

CONSTRUCTION TYPE	FIRE-RESISTANCE RATING
IA—Noncombustible	3 Hours
IB—Noncombustible	2 Hours
IIA—Noncombustible	1 Hour
IIB—Noncombustible	0 Hours
IIIA—Noncombustible/combustible	1 Hour
IIIB—Noncombustible/combustible	0 Hours
IV—Heavy timber (HT)	HT
VA—Combustible	1 Hour
VB—Combustible	0 Hours

J101.4 Fire protection systems (right wing). The *fire protection system* shall be designated by determining its level of protection and assigning the appropriate designation to the right wing of the Maltese cross. Where multiple systems are provided, all shall be listed:

AS *Automatic sprinkler system* installed throughout

DS Dry sprinkler system and designated areas

FA Fire alarm system

FP Fire pump

FW *Fire wall* and designated areas

PAS Pre-action sprinkler system and designated floor

PS Partial *automatic sprinkler system*, and designate floor

CES Chemical extinguishing system and designated area

CS Combination sprinkler and standpipe system

S Standpipe system

NS No system installed

J101.5 Occupancy type (bottom wing). The occupancy of a building or structure shall be designated in accordance with the occupancy classification found in Section 302.1 of the *International Building Code* and the corresponding designation shall be placed in the bottom wing of the Maltese cross. Where a building or structure contains a mixture of uses and occupancies; all uses and occupancies shall be identified.

A Assembly

B Business

E Educational

F Factory or Industrial

H High Hazard

I Institutional

M Mercantile

R Residential

J101.6 Hazards of content (left wing). The hazards of building contents shall be designated by one of the following classifications as defined in NFPA 13 and the appropriate designation shall be placed inside the left wing of the Maltese cross:

LH Light hazard

MH Moderate hazard

HH High hazard

J101.7 Tactical considerations (center circle). The center circle shall include the name of the local fire service and when required the letters TC for tactical considerations. Where fire fighters conduct preplan operations, a unique situation(s) for tactical considerations shall be identified and the information provided to the fire dispatch communications center to further assist fire fighters in identifying that there is special consideration(s) for this occupancy. Special consideration designations include, but are not limited to:

1. Impact-resistant drywall.
2. Impact-resistant glazing, such as blast or hurricane-type glass.
3. All types of roof and floor structural members including but not limited to post-tension concrete, bar joists, solid wood joists, rafters, trusses, cold-formed galvanized steel, I-joists and I-beams; green roof with vegetation, soil and plants.
4. Hazardous materials (explosives, chemicals, plastics, etc.).
5. Solar panels and DC electrical energy.
6. HVAC system; and smoke management system for pressurization and exhaust methods.
7. Other unique characteristic(s) within the building that are ranked according to a potential risk to occupants and fire fighters.

J101.8 Sign classification maintenance, building information. Sign maintenance shall comply with each of the following:

1. Fire departments in the jurisdiction shall define the designations to be placed within the sign.
2. Fire departments in the jurisdiction shall conduct annual inspections to verify compliance with this section of the code and shall notify the *owner*, or the *owner's* agent, of any required updates to the sign in accordance with fire department designations and the *owner*, or the *owner's* agent, shall comply within 30 days.
3. The owner of a building shall be responsible for the maintenance and updates to the sign in accordance with fire department designations.

J101.9 Training. Jurisdictions shall train fire department personnel on Sections J101.1 through J101.9.

SECTION J102
REFERENCED STANDARDS

ICC	IBC—15	International Building Code	J101.3, J101.5
NFPA	13—13	Installation of Sprinkler Systems	J101.6

APPENDIX K

CONSTRUCTION REQUIREMENTS FOR EXISTING AMBULATORY CARE FACILITIES

Deleted.

APPENDIX L

REQUIREMENTS FOR FIRE FIGHTER AIR REPLENISHMENT SYSTEMS

The provisions contained in this appendix are not mandatory unless specifically referenced in the adopting ordinance.

SECTION L101 GENERAL

L101.1 Scope. Fire fighter air replenishment systems (FARS) shall be provided in accordance with this appendix. The adopting ordinance shall specify building characteristics or special hazards that establish thresholds triggering a requirement for the installation of a FARS. The requirement shall be based upon the fire department's capability of replenishing fire fighter breathing air during sustained emergency operations. Considerations shall include:

1. Building characteristics, such as number of stories above or below grade plane, floor area, type of construction and fire-resistance of the primary structural *frame* to allow sustained fire-fighting operations based on a rating of not less than 2 hours.
2. Special hazards, other than buildings, that require unique accommodations to allow the fire department to replenish fire fighter breathing air.
3. Fire department staffing level.
4. Availability of a fire department breathing air replenishment vehicle.

SECTION L102 DEFINITIONS

L102.1 Definitions. For the purpose of this appendix, certain terms are defined as follows:

FIRE FIGHTER AIR REPLENISHMENT SYSTEM (FARS). A permanently installed arrangement of piping, valves, fittings and equipment to facilitate the replenishment of breathing air in self contained breathing apparatus (SCBA) for fire fighters engaged in emergency operations.

SECTION L103 PERMITS

L103.1 Permits. Permits shall be required to install and maintain a FARS. Permits shall be in accordance with Sections L103.2 and L103.3.

L103.2 Construction permit. A construction permit is required for installation of or modification to a FARS. The construction permit application shall include documentation of an acceptance and testing plan as specified in Section L105.

L103.3 Operational permit. An operational permit is required to maintain a FARS.

SECTION L104 DESIGN AND INSTALLATION

L104.1 Design and installation. A FARS shall be designed and installed in accordance with Sections L104.2 through L104.15.

L104.2 Standards. Fire fighter air replenishment systems shall be in accordance with Sections L104.2.1 and L104.2.2.

L104.2.1 Pressurized system components. Pressurized system components shall be designed and installed in accordance with ASME B31.3.

L104.2.2 Air quality. The system shall be designed to convey breathing air complying with NFPA 1989.

L104.3 Design and operating pressure. The minimum design pressure shall be 110 percent of the fire department's normal SCBA fill pressure. The system design pressure shall be marked in an approved manner at the supply connections, and adjacent to pressure gauges on any fixed air supply components. Pressure shall be maintained in the system within 5 percent of the design pressure.

L104.4 Cylinder refill rate. The FARS shall be capable of refilling breathing air cylinders of a size and pressure used by the fire department at a rate of not less than two empty cylinders in 2 minutes.

L104.5 Breathing air supply. Where a fire department mobile air unit is available, the FARS shall be supplied by an external mobile air connection in accordance with Section L104.14. Where a fire department mobile air unit is not available, a stored pressure air supply shall be provided in accordance with Section L104.5.1. A stored pressure air supply shall be permitted to be added to a system supplied by an external mobile air connection provided that a means to bypass the stored pressure air supply is located at the external mobile air connection.

L104.5.1. Stored pressure air supply. A stored pressure air supply shall be designed based on Chapter 24 of NFPA 1901 except that provisions applicable only to mobile apparatus or not applicable to system design shall not apply. A stored pressure air supply shall be capable of refilling not less than 50 empty breathing air cylinders of a size and pressure used by the fire department.

L104.5.2. Retrofit of external mobile air connection. A FARS not initially provided with an external mobile air connection due to the lack of a mobile air unit shall be retrofitted with an external mobile air connection where a mobile air unit becomes available. Where an external mobile air connection is provided, a means to bypass the

stored pressure air supply shall be located at the external mobile air connection. The retrofit shall be completed not more than 12 months after notification by the *fire code official*.

L104.6 Isolation valves. System isolation valves that are accessible to the fire department shall be installed on the system riser to allow piping beyond any air cylinder refill panel to be blocked.

L104.7 Pressure relief valve. Pressure relief valves shall be installed at each point of supply and at the top or end of every riser. The relief valve shall meet the requirements of CGA S-1.3 and shall not be field adjustable. Pressure relief valves shall discharge in a manner that does not endanger personnel who are in the area. Valves, plugs or caps shall not be installed in the discharge of a pressure relief valve. Where discharge piping is used the end shall not be threaded.

L104.8 Materials and equipment. Pressurized system components shall be *listed* or *approved* for their intended use and rated for the maximum allowable design pressure in the system. Piping and fittings shall be stainless steel.

L104.9 Welded connections. Piping connections that are concealed shall be welded.

L104.10 Protection of piping. System piping shall be protected from physical damage in an *approved* manner.

L104.11 Compatibility. Fittings and connections intended to be used by the fire department shall be compatible with the fire department's equipment.

L104.12 Security. Connections to a FARS shall be safeguarded from unauthorized access in an *approved* manner.

L104.13 Fill stations. Fire fighter air replenishment fill stations shall comply with Section L104.13.1 through L104.13.3.

L104.13.1 Location. Fill stations for refilling breathing air cylinders shall be located as follows:

1. Fill stations shall be provided at the fifth floor above and below the ground level floor and every third floor level thereafter.
2. On floor levels requiring fill stations, one fill station shall be provided adjacent to a required exit stair at a location designated by the *fire code official*. In buildings required to have three or more exit stairs, additional fill stations shall be provided at a ratio of one fill station for every three stairways.

L104.13.2 Design. Fill stations for breathing air cylinders shall be designed to meet the following requirements:

1. A pressure gauge and pressure-regulating devices and controls shall be provided to allow the operator to control the fill pressure and fill rate on each cylinder fill hose.
2. Valves controlling cylinder fill hoses shall be slow-operating valves.
3. A separate flow restriction device shall be provided on each fill hose.
4. A method shall be provided to bleed each cylinder fill hose.
5. The fill station shall be designed to provide a containment area that fully encloses any cylinder being filled and flexible cylinder fill hoses, and directs the energy from a failure away from personnel. Fill stations shall be designed to prohibit filling of cylinders that are not enclosed within the containment area.

   Exception: Where required or *approved* by the fire chief, fill stations providing for the direct refilling of the fire fighters' breathing air cylinders using Rapid Intervention Crew/Company Universal Air Connection (RIC/UAC) fittings shall be used in lieu of cylinder fill stations that utilize containment areas.

L104.13.3 Cylinder refill rate. Fill stations shall be capable of simultaneously filling two or more empty breathing air cylinders equivalent to those used by the fire department to the cylinders' design pressure within 2 minutes.

L104.14 External mobile air connection. An external mobile air connection shall be provided for fire department mobile air apparatus where required by Section L104.5 to supply the system with breathing air.

L104.14.1 Location. The location of the external mobile air connection shall be accessible to mobile air apparatus and *approved* by the fire chief.

L104.14.2 Protection from vehicles. A means of vehicle impact protection in accordance with Section 312 shall be provided to protect mobile air connections that are subject to vehicular impact.

L104.14.3 Clear space around connections. A working space of not less than 36 inches (914 mm) in width, 36 inches (914 mm) in depth and 78 inches (1981 mm) in height shall be provided and maintained in front of and to the sides of external mobile air connections.

L104.15 Air monitoring system. An *approved* air monitoring system shall be provided. The system shall automatically monitor air quality, moisture and pressure on a continual basis. The air monitoring system shall be equipped with not less than two content analyzers capable of detecting carbon monoxide, carbon dioxide, nitrogen, oxygen, moisture and hydrocarbons.

L104.15.1 Alarm conditions. The air monitoring system shall transmit a supervisory signal when any of the following levels are detected:

1. Carbon monoxide exceeds 5 ppm.
2. Carbon dioxide exceeds 1,000 ppm.
3. An oxygen level below 19.5 percent or above 23.5 percent.
4. A nitrogen level below 75 percent or above 81 percent.
5. Hydrocarbon (condensed) content exceeds 5 milligrams per cubic meter of air.

6. The moisture concentration exceeds 24 ppm by volume.
7. The pressure falls below 90 percent of the maintenance pressure specified in Section L104.3.

L104.15.2 Alarm supervision, monitoring and notification. The air monitoring system shall be electrically supervised and monitored by an *approved* supervising station, or where *approved*, shall initiate audible and visual supervisory signals at a constantly attended location.

L104.15.3 Air quality status display. Air quality status shall be visually displayed at the external mobile air connection required by Section L104.14.

SECTION L105
ACCEPTANCE TESTS

L105.1 Acceptance tests. Upon completion of the installation, a FARS shall be acceptance tested to verify compliance with equipment manufacturers' instructions and design documents. Oversight of the acceptance tests shall be provided by a registered design professional. Acceptance testing shall include all of the following:

1. A pneumatic test in accordance with ASME B31.3 of the complete system at a minimum test pressure of 110 percent of the system design pressure using oil free dry air, nitrogen or argon shall be conducted. Test pressure shall be maintained for not less than 24 hours. During this test, all fittings, joints and system components shall be inspected for leaks. Defects in the system or leaks detected shall be documented and repaired.
2. A cylinder-filling performance test shall be conducted to verify compliance with the required breathing air cylinder refill rate from the exterior mobile air connection and, where provided, a stored air pressure supply system.
3. The air quality monitoring system shall be tested to verify both of the following conditions:
   - 3.1. Visual indicators required by Section L104.15.1 function properly.
   - 3.2. Supervisory signals are transmitted as required by Section L104.15.2 for each sensor based on a sensor function test.
4. Connections intended for fire department use shall be confirmed as compatible with the fire department's mobile air unit, SCBA cylinders and, where provided, RIC/UAC connections.
5. Air samples shall be taken from not less than two fill stations and submitted to an *approved* gas analysis laboratory to verify compliance with NFPA 1989. The FARS shall not be placed into service until a written report verifying compliance with NFPA 1989 has been provided to the *fire code official.*

SECTION L106
INSPECTION, TESTING AND MAINTENANCE

L106.1 Periodic inspection, testing and maintenance. A FARS shall be continuously maintained in an operative condition and shall be inspected not less than annually. Not less than quarterly, an air sample shall be taken from the system and tested to verify compliance with NFPA 1989. The laboratory test results shall be maintained on site and readily available for review by the *fire code official.*

SECTION L107
REFERENCED STANDARDS

ASME B31.3—2012	Process Piping	L104.2.1, L105.1
CGA S-1.3—2008	Pressure Relief Device Standards – Part 3 Stationary Storage Containers for Compressed Gases	L104.7
NFPA 1901—09	Standard for Automotive Fire Apparatus	L104.5.1,
NFPA 1989—13	Breathing Air Quality for Fire Emergency Services Respiratory Protection	L104.2.2, L105.1, L106.1

APPENDIX M

HIGH-RISE BUILDINGS—RETROACTIVE AUTOMATIC SPRINKLER REQUIREMENT

Deleted.

Agenda Item: XII.G.
Meeting Date: 12/3/2018

MEMORANDUM TO BOARD OF COMMISSIONERS:

FROM: **D. Bryan Phillips**

DATE: **11/09/2018**

SUBJECT: **Renewal of Lease on the Carthage Viper Tower**

PRESENTER: **D. Bryan Phillips**

REQUEST:
Approve a letter to the NC State Highway Patrol-VIPER Project to request the renewal of the Lease for the communication antenna space on the telecommunications facility located at Glendon-Carthage Road in Carthage, NC for an additional five (5) years and authorize Madam Chair to sign the letter.

BACKGROUND:
The original lease was approved and signed in 2009 for five (5) years. The terms of the lease allow the parties to renew the lease, in five-year increments, up to five times. The first renewal was requested in 2013; the term of that renewal ended on September 30, 2018. The lease is up for renewal again and, if the request to renew is granted, the lease will expire on September 30, 2023. A letter addressed to NC State Highway Patrol to request renewal has been drafted.

IMPLEMENTATION PLAN:
Approve and sign the letter requesting the renewal.

FINANCIAL IMPACT STATEMENT:
The rent for the space on the telecommunications tower is $1.00.

RECOMMENDATION SUMMARY:
Make a motion to approve the attached letter to the NC State Highway Patrol-VIPER Project to request the renewal of the Lease for the communication antenna space on the telecommunications facility located at Glendon-Carthage Road in Carthage, NC for an additional five (5) year term, beginning on October I, 2018 and ending on September 30, 2023, and authorize the Madam Chair to sign the letter

SUPPORTING ATTACHMENTS:

Letter

D. Bryan Phillips
Director

D. Scot Brooks, CEM, CCEMTP
Deputy Director - Emergency Management

E. Grant Hunsucker
EMS Chief

Moore County
Department of Public Safety

Bryan M. Lyczkowski, CFI
Deputy Fire Marshal

Joe Mancos, AAS, Paramedic
Logistics/Education Chief

Jason Steel
911 Chief

November 15, 2018

NC Highway Patrol – Viper Project
Ron Moore
DPS Property Manager
NC Department of Public Safety
Purchasing and Logistics
MSC 4227
3030 Hammond Business Place
Raleigh, NC 27603

Dear Mr. Moore,

This letter is to confirm Moore County's desire to renew the Lease Agreement for communication antenna space on your telecommunications facility located on Glendon-Carthage Road in Carthage, NC 28327 for an additional five (5) years term effective October 1, 2018 making the new termination date September 30, 2023. If you have any additional question or need any additional information, please let us know.

Sincerely yours,

Chairman, Moore County Board of Commissioners

302 S. McNeill Street
Carthage, NC 28327

P.O. Box 905
Carthage, NC 28327
www.moorecountync.gov

Phone: 910-947-6317
Fax: 910-947-6378

Agenda Item: XII.H.
Meeting Date: 12/3/2018

MEMORANDUM TO BOARD OF COMMISSIONERS:

FROM: **Grant Hunsucker**

DATE: **11/29/2018**

SUBJECT: **Purchase and Contract for Service – EMS Stretchers**

PRESENTER: **D. Bryan Phillips**

REQUEST:
1. Make a motion to do all of the following upon final approval of the County Attorney and Chief Financial Officer: (1) award the bid (RFP#: 2019-03) to U.S. Bancorp Government Leasing and Finance Inc.; (2) authorize Moore County to enter into a purchase contract and contract for services not to exceed $223,200 for Stryker Power-Pro XT stretchers, and a (7) year service agreement. Allow the Chairman to sign all associated documents pending the Moore County Attorney and Finance Officer approval.

BACKGROUND:
Moore County Emergency Medical Services is in critical need of new EMS stretchers and an associated extended service agreement.

Our current Stryker stretchers are eight plus years old and are not currently covered with a service agreement which has led to unbudgeted maintenance costs during the current fiscal year.

We will be lease/purchasing (11) new Stryker Power-Pro XT stretchers to include a (7) year Protect+ service agreement.

IMPLEMENTATION PLAN:
Stryker Medical is the sole source manufacturer of the Stryker Power-Pro XT ambulance cot (Model 6506).

A Formal Bid was issued following the Moore County Finance Department policies for the lease financing of the equipment. Four responsive bids were received.

FINANCIAL IMPACT STATEMENT:

RFP was issued beginning of FY19. There were four (4) responsive, responsible bidders:
- US Bancorp - Interest Rate 3.304%
- Stryker – Interest Rate 6.57%
- United Financial – Interest Rate 3.65%
- Bank Fund, LLC – Interest Rate 3.63%

Total Principal Payment - $223,200.00
Total Interest payment- $22,602.80

Total Debt: $245,802.80
Annual payment: $49,160.56

RECOMMENDATION SUMMARY:
Motion to award the bid (RFP#: 2019-03) to U.S Bancorp Government Leasing and Finance Inc. and authorize Moore County to enter into a purchase contract and contract for services not to exceed $223,200 for Stryker Power-Pro XT stretchers, and a (7) year service agreement. Allow the Chairman to sign all associated documents pending the Moore County Attorney and Finance Officer approval.

SUPPORTING ATTACHMENTS:
Purchase Contract
Contract for Services
Bid Tabulation
Stryker Medical Sole Source Letter

STATE OF NORTH CAROLINA PURCHASE CONTRACT

COUNTY OF MOORE

This Contract is made the ____ day of December, 2018, between the County of Moore, a political subdivision of the State of North Carolina (the "County"), and Stryker Corporation, an entity formed under the laws of the State of Michigan (the "Seller").

1. Description of Goods

   The Seller will transfer and deliver to the County, and the County, subject to the conditions set forth in this Contract, will take delivery and accept the Goods, as provided for in Attachment 1, which is attached hereto and incorporated by reference as if fully set forth herein.

   Seller agrees that all Goods must fully conform to this Contract and failure to adhere to any portion, including but not limited to, quantity, quality, and time of performance, will constitute a breach.

2. Time of Delivery

   The Seller will deliver the Goods covered by this Contract to the County on or before **January 15, 2019**. Delivery will be made to the County's garage located at 703 Pinehurst Avenue in Carthage, North Carolina. The parties mutually agree that time is of the essence.

   This Contract is subject to the availability of funds to purchase the specified Goods may be terminated at any time during the term upon thirty (30) days' notice if such funds become unavailable.

3. Payment

   The County will pay the Seller **$176,805.92**, which includes delivery. Payment will occur within 30 days of delivery of the Goods. The County is responsible for the payment of any State of North Carolina taxes.

4. Inspection

   The County will have the right to inspect and test the Goods prior to acceptance.

5. Risk of Loss and Title

   The risk of loss will pass to the County upon delivery of the Goods. In addition, title to the Goods will pass to the County upon delivery.

6. Waiver

The failure by one party to require performance of any provision of this Contract will not affect that party's right to require performance at any time thereafter or to enforce other remedies available to it by law or under this Contract. In addition, no waiver of any breach or default of this Contract will constitute a waiver of any subsequent breach or default or a waiver of the provision itself.

7. Warranties

The Seller represents and warrants that:

a. It is a corporation, validly existing and in good standing under the laws of the State of Michigan and is qualified to do business in North Carolina;
b. It has the requisite power and authority to execute, deliver and perform its obligations under this Contract;
c. The Goods comply with all requirements set forth in this Contract;
d. The Goods are free of defects in title, claims, liens, labor, material or fabrication;
e. The Goods are shall comply with, and operate in accordance with, the Seller's specifications for the Goods set forth in this Contract;
f. The Goods are suitable for the purposes intended; and
g. The Goods are of merchantable quality.

8. Product Recall

In the event of any recall notice, technical service bulletin, or other important notification affecting the Goods, notice will be provided to the County as provided in Section 17 of this Contract.

9. Default

In the event the Seller defaults by one of the following, the County may, by written notice to the Seller, cancel all or any part of this contract or exercise any other remedy allowed under law:

a. Non-delivery, as required;
b. Not providing adequate assurance of performance; or
c. Breaches any term or condition of this Contract.

10. Termination of Agreement

This Contract may be terminated, without cause, by either party upon thirty (30) days written notice to the other party. This termination notice period will begin upon receipt of the notice of termination. Such a termination does not bar either party from pursuing a claim for damages for breach of the Contract.

This Contract may be terminated, for cause, by the non-breaching party notifying the breaching party of a substantial failure to perform in accordance with the provisions of this Contract and if the failure is not corrected within ten (10) days of the receipt of the notification. Upon such termination, the parties will be entitled to such additional rights and remedies as permitted by law.

Termination of this Contract, either with or without cause, will not form the basis of any claim for loss of anticipated profits by either party.

11. Iran Divestment Act Certification

The Contractor certifies that: (i) the Contractor is not listed on the Final Divestment List created by the State Treasurer pursuant to N.C.G.S. § 147-86.58 (the "Final Divestment List"), and (ii) the Contractor will not utilize any subcontractor performing work under this Contract, which is listed on the Final Divestment List. The Final Divestment List can be found on the State Treasurer's website at the address www.nctreasurer.com/Iran and should be updated every 180 days.

12. Compliance with Laws

The Contractor represents that it is in compliance with all Federal, State, and local laws, regulations or orders, as amended or supplemented. The implementation of this Contract will be carried out in strict compliance with all Federal, State and local laws.

13. Assignment

This Contract is not assignable by either party, by operation of law or otherwise.

14. Indemnification

To the fullest extent permitted by law, the Seller will indemnify and hold harmless the County, its officials, agents, and employees from and against all claims, damages, losses, expenses (direct, indirect or consequential), and costs (including reasonable attorney's fees) for personal injury, including death, and damage to tangible property to the extent arising directly from a defect in the product or negligent acts, errors, or omissions of the Seller, its officials, employees, or contractors under this Contract or under contracts entered into by the Seller in connection with this Contract. This indemnification will survive the termination of this Contract.

15. Governing Law

The validity of this Contract and any of its terms or provisions, as well as the rights and duties of the parties to this Contract, are governed by the laws of the State of North Carolina. All actions relating to this Contract will be brought in the General Court of Justice in the County of Moore and State of North Carolina.

16. Severability

If any provision of this Contract is held to be void, illegal, unenforceable, or in conflict with any law, the validity of the remaining portions and provisions of this Contract will not be affected.

17. Notices

All notices which may be required by this Contract or any rule of law will be effective when received by certified mail sent to the following addresses:

COUNTY OF MOORE:	MOORE COUNTY PUBLIC SAFETY ATTN: BRYAN PHILLIPS, DIRECTOR P.O. BOX 905 CARTHAGE, NC 28327
SELLER:	STRYKER MEDICAL LEGAL DEPARTMENT 3800 E. CENTRE AVENUE PORTAGE, MI 49009

18. Priority of Document

In the event of any inconsistency between this Contract and Attachment 1, the Contract will have priority over Attachment 1.

19. Non-Exclusive Agreement

The County and Seller acknowledge that this is a non-exclusive agreement. The County may purchase like or similar Goods from other sellers and the Seller may sell like or similar Goods to other buyers.

20. Modification

This Contract can be modified or rescinded only by written agreement of the Parties.

21. Entire Agreement

This Contract and Attachment 1 constitute the entire understanding between the parties and supersedes all prior understandings and agreements, whether oral or written, relating to the subject matter hereof.

22. Headings

Subject headings are for convenience only and will not affect the construction or interpretation of any provision.

The parties have expressed their agreement to these terms by causing this Contract to be executed by their duly authorized officers or agents. This agreement is effective as of the date first written above.

COUNTY OF MOORE

_____
Catherine Graham, Chair
Moore County Board of Commissioners

CONTRACTOR

_____
By: _____
Title: _____

ATTEST:

_____
Laura M. Williams
Clerk to the Board

PREAUDIT CERTIFICATE

This instrument has been preaudited in the manner required by the Local Government Budget and Fiscal Control Act.

_____
Finance Officer or Deputy Finance Officer

PRODUCT SPECIFICATIONS

The Goods and quantity of each to be sold by the Seller to the County are as follows:

Item Description	Part Number	Qty.	Unit Price	Total
Power-PRO XT	6506000000	11	$13,899.82	$152,898.02
XPS Option	6506040000	11	1,749.06	19,239.66
6506 PWR-LOAD/PERF-LOAD OPTION	6506034002	11	1,744.14	19,185.54
3-Stage IV Pole PR Option	6500315000	11	300.94	3,310.34
Pocketed Back Rest Pouch	6500130000	11	226.32	2,489.52
Head End Storage Flat	6500128000	11	121.36	1,334.96
Equipment Hook	6500147000	11	45.92	505.12
SMRT Charger Mounting Bracket	6500034000	11	31.16	342.76
PR Cot Retaining Post	6085033000	11		
Power Pro Standard Components	6506026000	11		
No Runner/HE O2	0054200994	11		
Non Power-Load Compatible	6506029000	11		
Trendelenburg	6085031000	11		
No HE Section O2 Bottle	6506036000	11		
ONE PER ORDER, MANUAL, ENG OPT	650606160000	11		
120V AC SMRT Charging Kit	6500028000	11		
J Hook	6092036018	11		
XPS Knee Gatch Bolster Matrss	6500003130	11		
No Steer Lock Option	6506037000	11		
3 YR X-Frame Powertrain Wrnty	7777881669	11		
2 YR Bumper to Bumper Warranty	7777881670	11		
DOM SHIP (NOT HI, AK, PR, GM)	0054030000	11		
X-RESTRAINT PACKAGE	6500001430	11		
STANDARD FOWLER	6506012003	11		
Dual Wheel Lock	6086602010	11		
			Total	**$199,305.92**

The County is transferring ownership of nine (9) Model 6500 PowerPro stretchers to the Seller as part of this purchase. The Seller is giving the County a trade-in credit of two thousand, five hundred dollars ($2,500.00) for each of the aforementioned stretchers, yielding a total trade-in credit of twenty-two thousand, five hundred dollars ($22,500.00). **The credit will be applied to reduce the purchase price for the eleven (11) stretchers described in the table above to: one hundred, fifty-seven thousand, six hundred twenty dollars and thirty-eight cents ($176,805.92)**

stryker®

Comprehensive Quotation

Sales Account Manager
TIMOTHY RICHARDSON
tim.richardson@stryker.com
1-800-327-0770
Fax: 336-217-7965

Remit to:
Stryker Medical
P.O. Box 93308
Chicago, IL 60673-3308

End User Shipping Address
1095934
MOORE COUNTY EMS
302 S MCNEILL ST
CARTHAGE, NC 28327

Shipping Address
1095934
MOORE COUNTY EMS
302 S MCNEILL ST
CARTHAGE, NC 28327

Billing Address
1191728
US BANCORP EQUIP FINANCE
PO BOX 230789
PORTLAND, OR 97281-0789

Customer Contact	Ref Number	Date	PO Number	Reference Field	Quote Type
	6906332	10/23/2018	QUOTE		

Line #	Quantity	Item Description	Part #	Unit Price	Extended Price	Item Comments
1.00	11	Power-PRO XT	6506000000	$18,118.72	$199,305.92	
		Options				
	11	Power-PRO XT	6506000000	$13,899.82	$152,898.02	
	11	XPS Siderails	6506040000	$1,749.06	$19,239.66	
	11	6506 PWR-LOAD/PERF-LOAD OPTION	6506034002	$1,744.14	$19,185.54	
	11	3 Stage IV Pole PR Option	6500315000	$300.94	$3,310.34	
	11	Pocketed Back Rest Pouch	6500130000	$226.32	$2,489.52	
	11	Head End Storage Flat	6500128000	$121.36	$1,334.96	
	11	Equipment Hook	6500147000	$45.92	$505.12	
	11	SMRT Charger Mounting Bracket	6500034000	$31.16	$342.76	
	11	PR Cot Retaining Post	6085033000			
	11	Power Pro Standard Components	6506026000			
	11	No Runner/HE O2	0054200994			
	11	Trendelenburg	6085031000			
	11	No HE Section O2 Bottle	6506036000			
	11	ONE PER ORDER, MANUAL, ENG OPT	650606160000			
	11	120V AC SMRT Charging Kit	6500028000			
	11	J Hook	6092036018			
	11	XPS Mattress - Black	6500003130			
	11	No Steer Lock Option	6506037000			
	11	3 YR X-Frame Powertrain Wrnty	7777881669			
	11	2 Yr Bumper to Bumper Warranty	7777881670			
	11	DOM SHIP (NOT HI, AK, PR, GM)	0054030000			
	11	X-RESTRAINT PACKAGE	6500001430			
	11	STANDARD FOWLER	6506012003			
	11	Dual Wheel Lock	6086602010			
2.00	11	Protect+ Power Cot - 7Year	77110001	$4,217.60	$46,393.60	

Note:

**Credit
(9) model 6500 Power PRO's @ ($2500.00) each. Total ($22500.00)

Product Total	$245,699.52
Trade-In Credit	($22,500.00)
Tax	$0.00
Total	**$223,199.52**

Signature: _____ Title/Position: _____ Date: _____

Deal Consummation: This is a quote and not a commitment. This quote is subject to final credit, pricing, and documentation approval. Legal documentation must be signed before your equipment can be delivered. Documentation will be provided upon completion of our review process and your selection of a payment schedule.
Confidentiality Notice: Recipient will not disclose to any third party the terms of this quote or any other information, including any pricing or discounts, offered to be provided by Stryker

to Recipient in connection with this quote, without Stryker's prior written approval, except as may be requested by law or by lawful order of any applicable government agency.
Terms: Net 30 Days. FOB origin. A copy of Stryker Medical's standard terms and conditions can be obtained by calling Stryker Medical's Customer Service at 1-800-STRYKER.
Cancellation and Return Policy: In the event of damaged or defective shipments, please notify Stryker within 30 days and we will remedy the situation. Cancellation of orders must be received 30 days prior to the agreed upon delivery date. If the order is cancelled within the 30 day window, a fee of 25% of the total purchase order price and return shipping charges will apply.

STATE OF NORTH CAROLINA **CONTRACT FOR SERVICES**

COUNTY OF MOORE

This Contract is entered into the ____ day of December, 2018, between the County of Moore, a political subdivision of the State of North Carolina (the "County"), and the Stryker Corporation, an entity formed under the laws of the State of Michigan (the "Contractor").

1. Services to be Provided and Agreed Charges

The Contractor agrees to provide services and materials (collectively referred to as "Services") contained in this Contract pursuant to the provisions and specifications identified in Attachment 1, which is incorporated by reference in this Contract. Pursuant to Section 3 of this Contract, the County agrees to pay for Services contained in Attachment 1.

2. Term of Contract

The term of this Contract is from **January 15, 2019,** through **January 14, 2026**.

This Contract is subject to the availability of funds to purchase the specified Services and may be terminated at any time during the term upon thirty (30) days' notice if such funds become unavailable.

3. Payment to Contractor

During the initial term and during the renewal term, the Contractor will receive from the County an amount not to exceed **$46,393.60** as full compensation for the provision of Services as provided herein. The County agrees to pay at the rates specified for Services, satisfactorily performed or provided, in accordance with this Contract. Unless otherwise specified, the Contractor will submit an itemized invoice to the County by the end of the month during which Services are performed or provided. Payment will be processed promptly upon receipt and approval of the invoice by the County.

4. Independent Contractor

The County and Contractor agree that the Contractor is an independent contractor and will not represent itself as an agent or employee of the County for any purpose in the performance of the Contractor's duties under this Contract. Accordingly, the Contractor will be responsible for payment of all federal, state and local taxes as well as business license fees arising out of the Contractor's activities in accordance with this Contract. For purposes of this Contract taxes will include, but not be limited to, Federal and State Income, Social Security and Unemployment Insurance taxes.

The Contractor, as an independent contractor, will perform all services in a professional manner and in accordance with the standards of applicable professional organizations and licensing agencies.

5. Insurance

The Contractor will maintain Workers' Compensation Insurance for all of the Contractor's employees. The Workers' Compensation Insurance will be in the amounts prescribed by the laws of the State of North Carolina.

The Contractor will maintain, at its expense, the following minimum insurance coverage:

Bodily Injury	$1,000,000.00 per occurrence
Property Damage	$100,000.00 per occurrence
Bodily Injury/Property Damage	$1,000,000.00 combined single limit per occurrence

Professional liability insurance will be required whenever the Contractor is required to be certified, licensed, or registered by a regulatory entity or where the Contractor's error in judgment, planning, design, or etc. could result in economic loss to the County. If professional liability insurance is required, the coverage must provide for no less than $1,000,000.00 combined single limit per occurrence.

The Contractor agrees to furnish the County proof of compliance with the insurance coverage requirements of this Contract upon request. The Contractor, upon request by the County, will furnish a certificate of insurance from an insurance company, licensed to do business in the State of North Carolina and acceptable to the County, verifying the existence of the insurance coverage required by the County. The certificate will provide for sixty (60) days advance notice in the event of termination or cancellation of coverage.

6. Indemnification

To the fullest extent permitted by law, the Contractor will indemnify and hold harmless the County, its officials, agents, and employees from and against all claims, damages, losses, and expenses, direct, indirect, or consequential (including but not limited to fees and charges of engineers or architects, attorneys, and other professionals and costs related to court action or arbitration) arising out of or resulting from the performance of this Contract or the actions of the Contractor, its officials, employees, or contractors under this Contract or under the contracts entered into by the Contractor in connection with this Contract. This indemnification will survive the termination of this Contract.

7. Health and Safety

The Contractor will be responsible for initiating, maintaining and supervising all safety precautions and programs required by OSHA and all other regulatory agencies while providing Services under this Contract.

8. E-Verify

Pursuant to North Carolina General Statute § 143-133.3, E-verify Compliance, the County may not enter into a contract unless the contractor, and the contractor's subcontractors under the contract, comply with the requirements of Article 2 of Chapter 64 of the General Statutes. The Contractor represents and warrants that it is in compliance with the requirements of Article 2 of Chapter 64 of the General Statutes. Further, the Contractor warrants that any subcontractors used by the Contractor will be in compliance with the requirements of Article 2 of Chapter 64 of the General Statutes.

9. Iran Divestment Act Certification

The Contractor certifies that: (i) the Contractor is not listed on the Final Divestment List created by the State Treasurer pursuant to N.C.G.S. § 147-86.58 (the "Final Divestment List"), and (ii) the Contractor will not utilize any subcontractor performing work under this Purchase Order which is listed on the Final Divestment List. The Final Divestment List can be found on the State Treasurer's website at the address www.nctreasurer.com/Iran and should be updated every 180 days.

10. Non-Discrimination in Employment

The Contractor will not discriminate against any employee or applicant for employment because of age, sex, race, creed, national origin, or disability. In the event the Contractor is determined by the final order of an appropriate agency or court to be in violation of this provision or any non-discrimination provision of federal, state or local law, this Contract may be suspended or terminated, in whole or in part, by the County. In addition, the Contractor may be declared ineligible for further contracts with the County.

11. Governing Law

The validity of this Contract and any of its terms or provisions, as well as the rights and duties of the parties to this Contract, are governed by the laws of the State of North Carolina. All actions relating to this Contract in any way will be brought in the General Courts of Justice in the County of Moore and the State of North Carolina.

12. Termination of Agreement

This Contract may be terminated, without cause, by either party upon thirty (30) days written notice to the other party. This termination notice period will begin upon receipt of the notice of termination. Such a termination does not bar either party from pursuing a claim for damages for breach of the Contract.

This Contract may be terminated, for cause, by the non-breaching party notifying the breaching party of a substantial failure to perform in accordance with the provisions of this Contract and if the failure is not corrected within ten (10) days of the receipt of the notification.

Upon such termination, the parties will be entitled to such additional rights and remedies as permitted by law.

Termination of this Contract, either with or without cause, will not form the basis of any claim for loss of anticipated profits by either party.

13. Successors and Assigns

The Contractor will not assign its interest in this Contract without the written consent of the County. The Contractor has no authority to enter into contracts on behalf of the County.

14. Compliance with Laws

The Contractor represents that it is in compliance with all Federal, State, and local laws, regulations or orders, as amended or supplemented. The implementation of this Contract will be carried out in strict compliance with all Federal, State, or local laws regarding discrimination in employment.

15. Notices

All notices which may be required by this Contract or any rule of law will be effective when received by certified mail sent to the following addresses:

COUNTY OF MOORE:	MOORE COUNTY PUBLIC SAFETY ATTN: BRYAN PHILLIPS, DIRECTOR P.O. BOX 905 CARTHAGE, NC 28327
CONTRACTOR:	STRYKER MEDICAL LEGAL DEPARTMENT 3800 E. CENTRE AVENUE PORTAGE, MI 49009

16. Audit Rights

For all Services being provided under this Contract, the County has the right to inspect, examine, and make copies of any and all books, accounts, invoices, records and other writings relating to the performance of those Services. Audits will take place at times and locations mutually agreed upon by both parties. The Contractor must make the materials to be audited available within one (1) week of the request for them.

17. County Not Responsible for Expenses

The County will not be liable to the Contractor for any expenses paid or incurred by the Contractor unless otherwise agreed in writing.

18. Equipment

The Contractor will supply, at its sole expense, all equipment, tools, materials, and supplies required to provide contracted Services unless otherwise agreed in writing.

19. Priority of Documents

In the event of any inconsistency between the Contract and any attachment to the Contract, the Contract will have priority.

20. Severability

If any provision of this Agreement shall be determined to be unenforceable by a court of competent jurisdiction, such determination will not affect any other provision of this Agreement.

21. Non-Waiver

The failure by one party to require performance of any provision of this Contract will not affect that party's right to require performance at any time thereafter or to enforce other remedies available to it by law or under this Contract. In addition, no waiver of any breach or default of this Contract will constitute a waiver of any subsequent breach or default or a waiver of the provision itself.

22. Entire Agreement

This Contract and Attachment 1 constitute the entire understanding between the parties and supersedes all prior understandings and agreements, whether oral or written, relating to the subject matter hereof.

23. Amendment

This Contract may only be amended by the written mutual agreement of the parties.

24. Drafted by Both Parties

This Contract is deemed to have been drafted by both parties and no interpretation will be made to the contrary.

25. Headings

Subject headings are for convenience only and will not affect the construction or interpretation of any provision.

The parties have expressed their agreement to these terms by causing this Contract to be executed by their duly authorized officers or agents. This Contract is effective as of the date first written above.

COUNTY OF MOORE

_____
Catherine Graham, Chair
Moore County Board of Commissioners

CONTRACTOR

_____
By: _____
Title: _____

ATTEST:

_____
Laura M. Williams
Clerk to the Board

PREAUDIT CERTIFICATE

This instrument has been preaudited in the manner required by the Local Government Budget and Fiscal Control Act.

_____
Finance Officer

SCOPE OF SERVICES

A. The Contractor will provide the County with a seven (7) year EMS Prevent+ ProCare Program on eleven (11) Power-PRO XT stretchers to be purchased by the County in November 2018.

B. The services include:

1. Parts;
2. Labor;
3. One annual PM inspections;
4. Unscheduled service;
5. SMRT battery replacement; and
6. Product equipment checklists.

C. The aforementioned replacement parts do not include mattresses and other disposable or expendable parts.

D. INSPECTION SCHEDULING. Service inspections will be scheduled in advance at a mutually agreed upon time for such period of time as is reasonably necessary to complete the service. Equipment not made available at the specified time will be serviced at the next scheduled service inspection unless specific arrangements are made with the Contractor. If specific arrangements are made, such arrangements will include travel and other special charges at Stryker's then current rates.

E. INSPECTION ACTIVITY. On each scheduled service inspection, the Contractor will inspect each available item of Equipment as required in accordance with the Contractor's then current Maintenance procedures for said Equipment.

F. SERVICE INVOICING. All invoices issued under this Contract will be paid within thirty (30) days of the date of the invoice.

G. INITIAL INSPECTION. This Contract shall be applicable only to the eleven (11) new stretchers to be purchased in November 2018.

H. OPERATION MAINTENANCE. The Contractor's service is ancillary to and not a complete substitute for the requirements of the County to adhere to the routine maintenance instructions provided by the Contractor, its Equipment and operations manuals, and accompanying labels and/or inserts for the Equipment. County's appropriate user personnel should be familiar with the instructions and contents of those manuals, labels and inserts and implement them accordingly.

I. SERVICE PLAN WARRANTY AND LIMITATIONS. During the term of this Contract, the Contractor will maintain the Equipment in good working condition. Equipment and Equipment components repaired or replaced under this Contract continue

to be warranted during this Contract. When the Equipment or a component is replaced, the item provided in replacement will be the County's property and the replaced item will be the Contractor's property. If a refund is provided by the Contractor, the Equipment for which the refund is provided must be returned to the Contractor and will become the Contractor's property. Notwithstanding any other provision of this Contract, this Contract does not include repairs or other services made necessary by or related to, the following: (1) Abnormal wear or damage caused by misuse or by failure to perform normal and routine maintenance as set out in the Stryker Maintenance Manual or Operating Instructions. (2) Accidents (3) Catastrophe (4) Acts of God (5) Any malfunction resulting from faulty maintenance, improper repair, damage and/or alteration by non-Contractor authorized personnel (6) Equipment on which any original serial numbers or other identification marks have been removed or destroyed; or (7) Equipment that has been repaired with any unauthorized or non-Contractor components.

J. HIPAA. All medical information and/or data concerning specific patients (including, but not limited to, the identity of the patients), derived from or obtained during the course of the Contract, shall be treated by both parties as confidential so as to comply with all applicable state and federal laws and regulations regarding confidentiality of patient records, and shall not be released, disclosed, or published to any party other than as required or permitted under applicable laws. The Contractor is not a "business associate" of the County, as the term "business associate" is defined by HIPAA (the Health Insurance Portability and Accountability Act of 1996 and 45 C.F.R. parts 142 and 160-164, as amended). To the extent the Contractor becomes a business associate of the County, the parties agree to negotiate and amend this Contract as necessary to comply with HIPAA and, if an agreement cannot be reached, this Contract will immediately terminate.

RFP 2019-03 Capital Lease Financing Services
Bid Tabulation
September 25, 2018 - 4:00 PM

	Stryker	United Financial	Bank Funding, LLC	US Bancorp
Amortization schedule attached	Yes	Yes	Yes	Yes
Interest rate	6.57%	3.65%	3.63%	3.304%
Term of repayment	5 years in arrears	5 years in arrears	5 years in arrears	60 months
Period	1/1/18-1/1/23			
Prepayment	Made at present value of the sum of the rents discounted by the interest rate	2.5% early payment premium	pre-pay remaining lease balance for 101% of the remaining balance	Prepayment after 13 months at 103% of O/S Balance
Proposed cost for buyout option at the end of contract	$ 1.00	$ -	$ 1.00	
List of additional costs	$ -	No closing costs	Escrow agent, cap at $500	$ -
Agreed to Part B	Yes			
Sample of capital lease agreement	Yes			No, but reference to the previous agreement
Total principal payments	$ 223,200.00	$ 223,200.00	$ 223,200.00	$ 223,200.00
Total interest payments	$ 47,318.80	$ 25,024.20	$ 24,883.95	$ 22,602.80
Total debt payments	$ 270,518.80	$ 248,224.20	$ 248,083.95	$ 245,802.80
Annual payment	$ 54,103.76	$ -	$ 49,616.79	$ 49,160.56
Date of notification	Prior to 12/28/18	Prior to 12/20/18	September 25th	12/11/2018
Funding date			October 18th	
Comments	Valid for 90 days, signed prior to 12/28/18	Valid and signed prior to 12/20/18	Exhibit A of the agreement sample: refers to qualified tax exempt, NOT CORRECT	Structured as an additional Schedule to the Master Tax-Exempt Lease Purchase Agreement dated 01/14/16

Zac Jordan – Marketing Manager
Stryker Medical
3800 E. Centre Ave. Portage, MI 49002

stryker

Date: January, 2018

Re: Power-PRO Ambulance Cot Sole Source Information

To Whom It May Concern,

Stryker Medical certifies that we are the sole manufacturer of the Stryker EMS Power-PRO XT ambulance cot (Model 6506). This correspondence is to inform you of the characteristics of the Power-PRO ambulance cot. These characteristics can be broken down into two primary categories: Independent Qualification and Ease of Use and Maintenance

Independent Qualification

- IPX6: The system is tested to withstand powerful water jets.
- IEC 60601-1 and IEC 60601-1-2: The Power-PRO XT cot conforms to industry standards for mechanical and electrical safety for medical electrical devices, as well as electromagnetic compatibility and immunity.
- BS EN-1789:2007, clause 4.5.9 when used with Power-LOAD cot fastener and X-Restraints: This is a European dynamic crash test which subjects a 50th percentile dummy to nominal 10g deceleration for a minimum of 50ms. Following the test there shall be no sharp edges or danger to the safety of persons in the road ambulance.
- Meets SAE J3027 dynamic crash test safety standards when used with Power-LOAD/Performance-LOAD cot fastener and X-Restraints.

Ease of Use and Maintenance

- The cot has a weight capacity of 700 lbs.
- When unloading with the manual release handle, the cot utilizes hydraulic dampening. Thus, the cot will not abruptly jar the operator or patient.
- The battery is placed at the foot-end of the stretcher.
- The cot legs power-retract in 2.4 seconds which speeds load time.
- The cot provides a load height of 36" and is operator adjustable to match the deck height of individual ambulances.
- The foot-end of the cot provides lifting bars and operator controls at two different heights, thus providing optimum ergonomics to most operator heights.
- The foot-end of the cot contains a large battery indicator light which displays amber or green which indicates battery level. A warning is given by a flashing amber light, providing the operator the time to change the battery before full depletion of power.
- The model 6506 has 6" x 2" sealed casters and bearings.
- The cot features a foot-end mounted hourly usage meter. This tool can be used to determine the timing of preventative maintenance checks.
- The cot features powder-coating of the entire aluminum frame (including the patient handling surfaces), thus eliminating aluminum oxidation throughout the cot.
- All caster bearings are sealed.
- The cot is power-washable.

Please contact your Sales Representative for further information.

Agenda Item: XII.I.
Meeting Date: December 3, 2018

MEMORANDUM TO THE MOORE COUNTY BOARD OF COMMISSIONERS:

FROM: **Richard Smith – Capital Projects Manager**

DATE: **November 29, 2018**

SUBJECT: Contract for Services – Riley Paving, Inc.

REQUEST: This is a request to review, approve, and execute the attached Contract with Riley Paving, Inc. for the proposed Paving Project at Carriage Oaks Center in Carthage, NC

BACKGROUND: As owners of the Carriage Oaks Center in Carthage, NC the County of Moore, is responsible for the up-keep and maintenance of the entrance driveways and interior access lanes that feed into our offices as well as the privately owned commercial businesses along 24/27. The County of Moore has been receiving complaints about the condition of said entrances recently and this scope is in response to that responsibility.

FINANCIAL IMPACT: Paragraph 3 of the contract **"Payment to Contractor"** is a not to exceed amount of **$197,589.00** Funds for this project are coming from the Property management Building Improvement Account.

IMPLEMENTATION PLAN: Execute the Contract as stated, and schedule the work with Riley Paving, Inc. Project is to be completed no later than April 1, 2019

RECOMMENDATION SUMMARY: To make a motion to approve the attached Contract with Riley Paving, Inc. and authorize the chair to sign the same.

SUPPORTING ATTACHMENTS: Contract for Services between **Owner** The County of Moore and **Contractor**, Riley Paving, Inc.

STATE OF NORTH CAROLINA

CONTRACT FOR SERVICES

COUNTY OF MOORE

This Contract is entered into the 20 day of November, 2018, between the County of Moore, a political subdivision of the State of North Carolina (the "County"), and Riley Paving, Inc., an entity incorporated under the laws of the State of North Carolina (the "Contractor").

1. Services to be Provided and Agreed Charges

The Contractor agrees to provide services and materials required to remove and replace asphalt at the Carriage Oaks Center in ~~Pinehurst~~ Carthage, North Carolina (collectively referred to as "Services") as outlined in this Contract pursuant to the provisions and specifications identified in Attachments 1 through 3. Pursuant to Section 3 of this Contract, the County agrees to pay for Services contained in Attachments 1 through 3. Attachments 1 through 3 are incorporated by reference into this Contract.

2. Term of Contract

The term of this Contract is from November 20 2018 through April 1, 2019.

This Contract is subject to the availability of funds to purchase the specified Services and may be terminated at any time during the term upon thirty (30) days' notice if such funds become unavailable.

3. Payment to Contractor

During the term of this Coutract, the Contractor will receive from the County an amount not to exceed $197,589.00 as full compensation for the provision of services as provided herein. The County agrees to pay at the rates specified for Services, satisfactorily performed or provided, in accordance with this Contract. Unless otherwise specified, the Contractor will submit an itemized invoice to the County once all Services are performed or provided. Payment will be processed promptly upon receipt and approval of the invoice by the County.

4. Independent Contractor

The County and Contractor agree that the Contractor is an independent contractor and will not represent itself as an agent or employee of the County for any purpose in the performance of the Contractor's duties under this Contract. Accordingly, the Contractor will be responsible for payment of all federal, state and local taxes as well as business license fees arising out of the Contractor's activities in accordance with this Contract. For purposes of this Contract, taxes will include, but not be limited to, Federal and State Income, Social Security and Unemployment Insurance taxes.

The Contractor, as an independent contractor, will perform all services in a professional manner and in accordance with the standards of applicable professional organizations and licensing agencies.

5. Insurance

The Contractor will maintain Workers' Compensation Insurance for all of the Contractor's employees. The Workers' Compensation Insurance will be in the amounts prescribed by the laws of the State of North Carolina.

The Contractor will maintain, at its expense, the following minimum insurance coverage:

General Liability	$2,000,000.00
Automobile Liability	$2,000,000.00
Umbrella Coverage	$5,000,000.00

Professional liability insurance will be required whenever the Contractor is required to be certified, licensed, or registered by a regulatory entity or where the Contractor's error in judgment, planning, design, etc., could result in economic loss to the County. If professional liability insurance is required, the coverage must provide for no less than $1,000,000.00 combined single limit per occurrence.

The Contractor agrees to furnish the County proof of compliance with the insurance coverage requirements of this Contract upon request. The Contractor, upon request by the County, will furnish a certificate of insurance from an insurance company, licensed to do business in the State of North Carolina and acceptable to the County, verifying the existence of the insurance coverage required by the County. The certificate will provide for sixty (60) days advance notice in the event of termination or cancellation of coverage.

6. Indemnification

To the fullest extent permitted by law, the Contractor will indemnify and hold harmless the County, its officials, agents, and employees from and against all claims, damages, losses, and expenses, direct, indirect, or consequential (including, but not limited to, fees and charges of engineers or architects, attorneys, and other professionals and costs related to court actions or arbitration) arising out of or resulting from the performance of this Contract or the actions of the Contractor, its officials, employees, or subcontractors under this Contract or under the contracts entered into by the Contractor in connection with this Contract. This indemnification will survive the termination of this Contract.

7. Health and Safety

The Contractor will be responsible for initiating, maintaining and supervising all safety precautions and programs required by the Occupational Safety and Health Administration and all other regulatory agencies while providing Services under this Contract.

8. E-Verify

Pursuant to North Carolina General Statute § 143-133.3, E-verify Compliance, the County may not enter into a contract unless the contractor, and the contractor's subcontractors under the contract, comply with the requirements of Article 2 of Chapter 64 of the General Statutes. The Contractor represents and warrants that it is in compliance with the requirements of Article 2 of Chapter 64 of the General Statutes. Further, the Contractor warrants that any subcontractors used by the Contractor will be in compliance with the requirements of Article 2 of Chapter 64 of the General Statutes.

9. Iran Divestment Act Certification

The Contractor certifies that: (i) the Contractor is not listed on the Final Divestment List created by the State Treasurer pursuant to N.C.G.S. § 147-86.58 (the "Final Divestment List"), and (ii) the Contractor will not utilize any subcontractor performing work under this Contract, which is listed on the Final Divestment List. The Final Divestment List can be found on the State Treasurer's website at the address www.nctreasurer.com/Iran and should be updated every 180 days.

10. Non-Discrimination in Employment

The Contractor will not discriminate against any employee or applicant for employment because of age, sex, race, creed, national origin, or disability. In the event the Contractor is determined by the final order of an appropriate agency or court to be in violation of this provision or any non-discrimination provision of federal, state or local law, this Contract may be suspended or terminated, in whole or in part, by the County. In addition, the Contractor may be declared ineligible for further contracts with the County.

11. Governing Law

The validity of this Contract and any of its terms or provisions, as well as the rights and duties of the parties to this Contract, are governed by the laws of the State of North Carolina. All actions relating to this Contract in any way will be brought in the General Courts of Justice in the County of Moore and the State of North Carolina.

12. Termination of Agreement

This Contract may be terminated, without cause, by either party upon thirty (30) days written notice to the other party. This termination notice period will begin upon receipt of the notice of termination. Such a termination does not bar either party from pursuing a claim for damages for breach of the Contract.

This Contract may be terminated, for cause, by the non-breaching party notifying the breaching party of a substantial failure to perform in accordance with the provisions of this Contract and if the failure is not corrected within ten (10) days of the receipt of the notification. Upon such termination, the parties will be entitled to such additional rights and remedies as permitted by law.

Termination of this Contract, either with or without cause, will not form the basis of any claim for loss of anticipated profits by either party.

13. Successors and Assigns

The Contractor will not assign its interest in this Contract without the written consent of the County. The Contractor has no authority to enter into contracts on behalf of the County.

14. Compliance with Laws

The Contractor represents that it is in compliance with all Federal, State, and local laws, regulations or orders, as amended or supplemented. The implementation of this Contract will be carried out in strict compliance with all Federal, State, or local laws regarding discrimination in employment.

15. Notices

All notices which may be required by this Contract or any rule of law will be effective when received by certified mail sent to the following addresses:

COUNTY OF MOORE:	MOORE COUNTY PROPERTY MANAGEMENT ATTN: BOBBY LAKE, DIRECTOR P.O. BOX 905 CARTHAGE, NC 28327
CONTRACTOR:	RILEY PAVING, INC. P.O. BOX 10 CARTHAGE, NC 28327

16. Audit Rights

For all Services being provided under this Contract, the County has the right to inspect, examine, and make copies of any and all books, accounts, invoices, records and other writings relating to the performance of those Services. Audits will take place at times and locations mutually agreed upon by both parties. The Contractor must make the materials to be audited available within one (1) week of the request for them.

17. County Not Responsible for Expenses

The County will not be liable to the Contractor for any expenses paid or incurred by the Contractor unless otherwise agreed in writing.

18. Equipment

The Contractor will supply, at its sole expense, all equipment, tools, materials, and supplies required to provide contracted Services unless otherwise agreed in writing.

19. Priority of Documents

In the event of any inconsistency between the Contract and any attachment to the Contract, the Contract will have priority.

20. Severability

If any provision of this Contract will be determined to be unenforceable by a court of competent jurisdiction, such determination will not affect any other provision of this Contract.

21. Non-Waiver

The failure by one party to require performance of any provision of this Contract will not affect that party's right to require performance at any time thereafter or to enforce other remedies available to it by law or under this Contract. In addition, no waiver of any breach or default of this Contract will constitute a waiver of any subsequent breach or default or a waiver of the provision itself.

22. Entire Agreement

This Contract and Attachments 1 through 3 constitute the entire understanding between the parties and supersedes all prior understandings and agreements, whether oral or written, relating to the subject matter hereof.

23. Amendment

This Contract may only be amended by the written mutual agreement of the parties.

24. Drafted by Both Parties

This Contract is deemed to have been drafted by both parties and no interpretation will be made to the contrary.

25. Headings

Subject headings are for convenience only and will not affect the construction or interpretation of any provision.

The parties have expressed their agreement to these terms by causing this Contract to be executed by their duly authorized officers or agents. This Contract is effective as of the date first written above.

COUNTY OF MOORE

Catherine Graham, Chair
Moore County Board of Commissioners

CONTRACTOR

Riley Paving Inc
By: [illegible]
Title: Corp Secretary

ATTEST:

Laura M. Williams
Clerk to the Board

PREAUDIT CERTIFICATE

This instrument has been preaudited in the manner required by the Local Government Budget and Fiscal Control Act.

Finance Officer

SCOPE OF SERVICES

A. The Contractor will provide all labor, materials, and equipment necessary to remove and replace asphalt at the Carriage Oaks Center, located on NC Hwy. 24/17 and US Hwy 15/501 in Carthage, North Carolina, in the areas indicated in Attachment 3. The Contractor will provide any traffic control required.

B. Surface Preparation. The existing surface shall be removed to the satisfaction of the County. There shall be no visible ruts, holes, or large rocks protruding from the surface to be treated. Existing soft spots in the base shall be compacted or excavated and backfilled with a suitable base course material. The area to be treated in any one operation shall be as indicated in Attachment 3.

C. Weather Limitations. Bituminous material shall not be placed during rainy or threatening weather, or when the moisture on the surface to be treated would prevent satisfactory bond. The surface coats shall not be applied when the air temperature is below fifty degrees (50°) Fahrenheit, unless otherwise approved by the County.

D. Heating and Application of Bituminous Material. Bituminous material shall be heated in such a manner as to insure heating of the entire mass with an efficient and positive control at all times. A curing period of twenty-four (24) hours may be required between the application of the prime coat and the next application of bituminous material, during which time the surface shall be kept in repair. The asphalt for the surface treatment shall be applied at a temperature to ensure proper base. Bituminous material shall be uniformly applied by means of a pressure distributor. The quantity of material as measured by the volume measuring device of the distributor shall not vary from the true quantity as herein specified by more than five percent (5%). Bituminous material shall not be applied until sufficient cover aggregate is on hand to cover the area to be applied at a particular application. If the aggregate spreader is delayed by breakdown or operational difficulties, application of bituminous material shall cease until the County is satisfied that delays will not recur.

E. Preparation and Application of Cover Aggregate. Cover material shall be sufficiently dried when it comes in contact with bituminous material so that a satisfactory bond or coating is obtained. When the prime coat has sufficiently cured, the asphalt for the surface coat shall be applied to the surface. Immediately following this application of bituminous material, the first coat of cover aggregate shall be uniformly spread over the surface with an approved mechanical spreader. A minimum curing period of twelve (12) hours will be required before the second coat of asphalt and cover aggregate is applied. Cover material shall be applied continuously and without delay until the particular application is covered. Whenever possible successive strips shall be applied before the previous strip has cooled. Cover material shall not be spread on the six inches (6") adjacent to an unprotected edge until the next strip of bituminous material has been applied. Rolling shall immediately follow the application of each coat of cover aggregate and shall continue until the surface is accepted as determined by the County.

F. Maintenance of Surface. After application of the second coat of cover material, the surface shall be maintained by the Contractor, at its expense, for a period of three (3) days. During this period the Contractor shall, at least once daily, redistribute the cover

material that has become displaced by traffic, by means of brooms, a drag or other method satisfactory to the County. When all possible aggregate has been imbedded in the bituminous material on each course to the satisfaction of the County, the Contractor shall sweep each course surface of all excess material and remove it to a designated area, unless otherwise directed by the County.

G. Measurement. Bituminous material and cover aggregate course will be measured by weight in tons (2,000 lbs.). Legible weight tickets shall be submitted to the Engineer for all bituminous material and cover aggregate delivered to the Project site for use in the Work. All weight tickets shall contain, at a minimum, the following information:

1) Weight ticket serial number;
2) Vehicle identification number;
3) The date and time the load was weighed;
4) The tare weight of the vehicle; and
5) The gross weight of the loaded vehicle, as registered on the scale.

The County shall not pay for that portion of any load in excess of the legal gross weight for the vehicle.

H. Basis of Payment. Amounts due under this Contract shall be calculated using the units of measure shown in the table below.

Cost Object	Unit of Measure
Bituminous Surface Treatment (B.S.T.) Asphalt for Base Coat (3-inches of Binder)	Ton
Bituminous Surface Treatment (B.S.T.) Asphalt for Prime Coat Overlay (2-inches of S9.5B)	Ton
Aggregate (stone)	Square Yard (Sq. Yd.)
Labor	L/S

SCHEDULE OF FEES

Area 1				
Cost Object	Quantity	Unit	Price Per Unit	Total Fee
L 19.OB. Asphalt for Base Coat (3-inches of Binder)	481	Ton	$108.00	$51,948.00
Asphalt for Prime Coat Overlay (2-inch of S9.5B)	303	Ton	$112.00	$33,936.00
Aggregate (stone) – as needed	TBD	Sq. Yd.	$10.00	TBD
Labor	1	LS	$4,100.00	$4,100.00
			Total for Area 1	**$89,984.00**

Area 2				
Cost Object	Quantity	Unit	Price Per Unit	Total Fee
L 19.OB. Asphalt for Base Coat (3-inches of Binder)	303	Ton	$108.00	$32,724.00
Asphalt for Prime Coat Overlay (2-inch of S9.5B)	231.75	Ton	$112.00	$25,956.00
Aggregate (stone) – as needed	TBD	Sq. Yd.	$10.00	TBD
Labor	1	LS	$2,500.00	$2,500.00
			Total for Area 2	**$61,180.00**

Area 3				
Cost Object	Quantity	Unit	Price Per Unit	Total Fee
L 19.OB. Asphalt for Base Coat (3-inches of Binder)	235	Ton	$108.00	$25,380.00
Asphalt for Prime Coat Overlay (2-inch of S9.5B)	174.53	Ton	$112.00	$19,547.36
Aggregate (stone) – as needed	TBD	Sq. Yd.	$10.00	TBD
Labor	1	LS	$1,500.00	$1,500.00
			Total for Area 3	**$46,427.36**

Project Summary	
Area 1	$89,984.00
Area 2	$61,180.00
Area 3	$46,427.36
SUBTOTAL	$197,591.36
Adjustment for Arithmetic Error	($2.36)
GRAND TOTAL	$197,589.00

SITE MAP

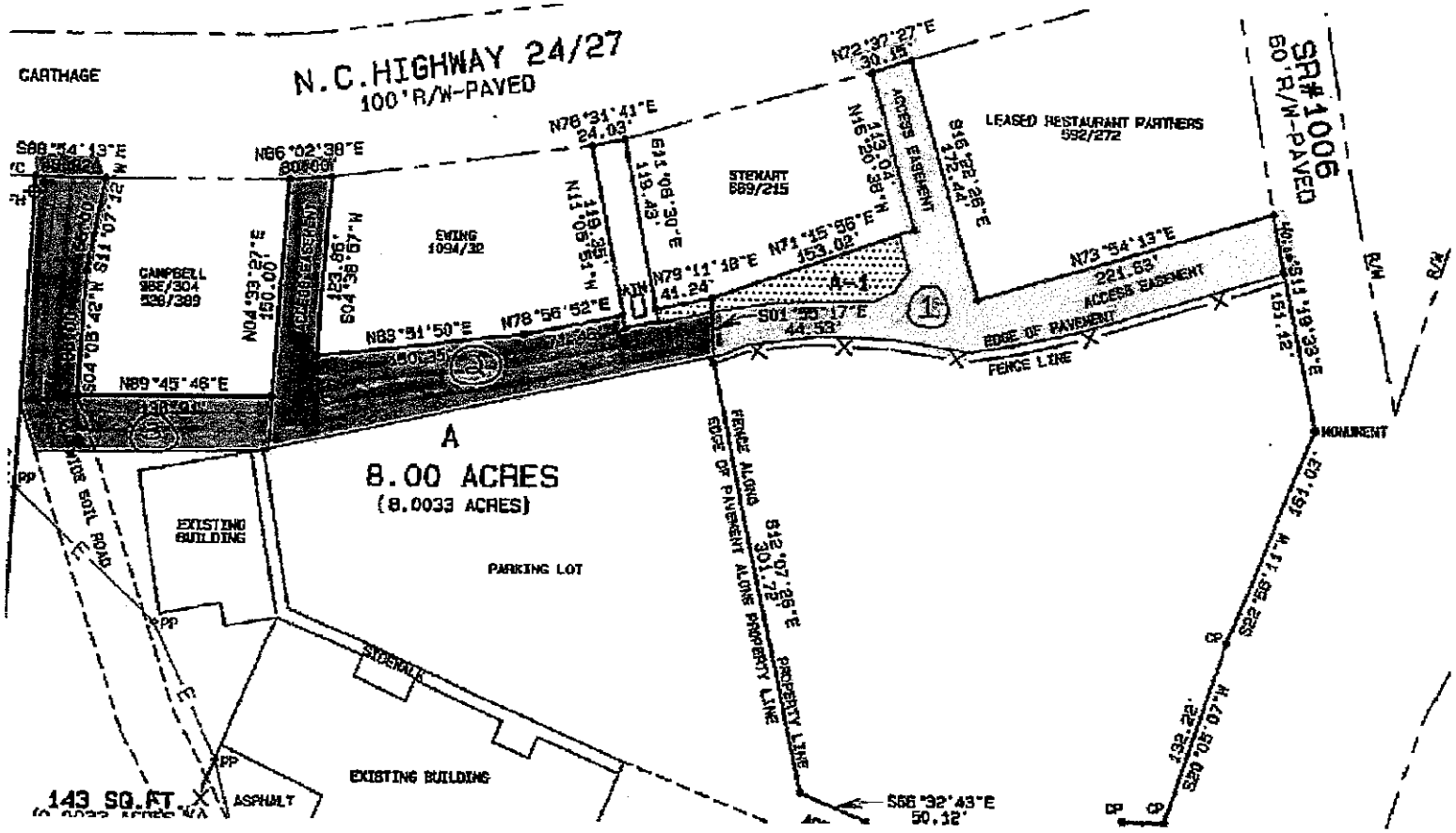

FN 18-0466

Agenda Item: XII.J.
Meeting Date: 12/03/2018

MEMORANDUM TO THE MOORE COUNTY BOARD OF COMMISSIONERS:

FROM: **Wayne Vest, County Manager**

DATE: **11/27/2018**

SUBJECT: **Resolution Levying an Additional One-Quarter Cent County Sales and Use Tax**

PRESENTER: Wayne Vest, County Manager

REQUEST:

Adopt a Resolution Levying an Additional One-Quarter Cent County Sales and Use Tax.

BACKGROUND:

On November 6, 2018, Moore County voters approved the levy of the One-Quarter Cent County Sales and Use Tax. The Board is required to adopt a resolution levying the tax. The required notice of intent to adopt the resolution was published in the Wednesday, November 21, 2018, edition of The Pilot.

IMPLEMENTATION PLAN:

Upon adoption, the Clerk to the Board will certify the resolution and deliver it to the NC Department of Revenue.

RECOMMENDATION SUMMARY:

Make a motion to adopt a Resolution Levying an Additional One-Quarter Cent County Sales and Use Tax.

ATTACHMENTS:

Resolution

MOORE COUNTY BOARD OF COMMISSIONERS
THE STATE OF NORTH CAROLINA

December 3, 2018

RESOLUTION LEVYING AN ADDITIONAL ONE-QUARTER CENT (1/4¢)
COUNTY SALES AND USE TAX

WHEREAS, the General Assembly has authorized county boards of commissioners across the State of North Carolina to levy a one-quarter percent (.25%) county sales and use tax, contingent on an advisory referendum in which the majority of those casting ballots voted for the levy of the tax; and

WHEREAS, the Moore County Board of Commissioners directed the Moore County Board of Elections to conduct an advisory referendum on the question of whether to levy the One-Quarter Center (1/4¢) County Sales and Use Tax in Moore County on the 6th day of November 2018; and

WHEREAS, the ballots were cast 58.87% FOR and 41.13% AGAINST the levy of the One-Quarter Cent (1/4¢) County Sales and Use Tax; and

WHEREAS, the Board has provided the required 10 days public notice of the Board's intent to consider this resolution to levy the tax; and

WHEREAS, the Moore County Board of Commissioners hereby finds that the levy of the One-Quarter Cent (1/4¢) County Sales and Use Tax is necessary to help address and alleviate fiscal constraints with Moore County; and

NOW, THEREFORE, BE IT RESOLVED by the Moore County Board of Commissioners:

(1) There is hereby levied within Moore County the One-Quarter Center (1/4¢) County Sales and Use Tax, authorized in Section 31.17(b) of the Current Operations and Capital Improvements Appropriations Act of 2007 (Session Law 2007-323).

(2) Collection of the tax by the North Carolina Secretary of Revenue, shall begin on and continue after the 1st day of April 2019.

(3) The net proceeds of the tax levied herein shall be distributed by the Secretary of Revenue to Moore County in accordance with Article 39 Chapter 105 of the North Carolina General Statutes. Notwithstanding the provisions of Article 39 of Chapter 105, the additional One-Quarter Cent (1/4¢) County Sales and Use Tax does not apply to the sales price of food that is exempt from tax pursuant to N.C.G.S. 105-164.13B. The Secretary shall not divide the amount allocated to a county between Moore County and the municipalities within Moore County.

(4) This Resolution is effective upon its adoption, and a certified copy hereof shall be

forwarded to the Secretary of the North Carolina Department of Revenue, P.O. Box 25000, Raleigh, NC 27640, along with a certified copy of the Moore County Board of Election results from the advisory referendum.

Adopted this 3rd day of December 2018.

(SEAL)

_____	_____
Laura M. Williams	Catherine Graham, Chair
Clerk to the Board	Moore County Board of Commissioners

Agenda Item: XIII.A.
Meeting Date: **12/03/2018**

MEMORANDUM TO THE MOORE COUNTY BOARD OF COMMISSIONERS:

FROM: **Laura M. Williams, Clerk**

DATE: **11/27/2018**

SUBJECT: **Appointments / Courthouse Facilities Advisory Committee**

REQUEST:

Appoint member to the Courthouse Facilities Advisory Committee.

BACKGROUND:

Neil Godfrey has previously served on the Courthouse Facilities Advisory Committee. Ronnie Fields will now serve in the Sheriff position.

IMPLEMENTATION PLAN:

Clerk will make notification of appointment and update records.

RECOMMENDATION SUMMARY:

Make a motion to appoint Sheriff Ronnie Fields to the Courthouse Facilities Advisory Committee.

Agenda Item: XIII.B.
Meeting Date: 12/03/2018

MEMORANDUM TO THE MOORE COUNTY BOARD OF COMMISSIONERS:

FROM: **Laura M. Williams, Clerk**

DATE: **11/27/2018**

SUBJECT: **Appointments / Fire Commission**

REQUEST:

Appoint two chief members and three citizen members to the Fire Commission.

BACKGROUND:

The terms for Fire Commission members Barbara Allred (citizen rep – District 5), Larry Upchurch (citizen rep – District 3), Jon McKiver (chief – South region), and Erik Stromberg (chief – West region) expired November 30, 2018. Additionally, the citizen representative member for District 1 has been vacant due to a resignation.

Barbara Allred is willing and recommended to continue service. Larry Upchurch is not available for an additional term and James Dunlap has been recommended and agreed to fill that position. Larry Caddell has been recommended and agreed to fill the citizen District 1 position that is vacant. Chiefs Jon McKiver and Erik Stromberg have been recommended to continue representing their respective regions.

The Moore County Chiefs Association President and Fire Commission Vice Chair have requested altering term lengths for all members so that membership remains consistent through the budget cycle rather than new members coming aboard mid-cycle.

IMPLEMENTATION PLAN

Clerk will make notification of appointments and update records.

RECOMMENDATION SUMMARY

Make a motion to waive the term lengths prescribed by the Fire Commission bylaws for the appointments made during the December 3, 2018 meeting only. Make a motion to appoint Barbara Allred, James Dunlap, and Larry Caddell as citizen representatives to the Fire Commission for terms commencing December 1, 2018 and expiring May 31, 2021. Make a motion to appoint Jon McKiver and Erik Stromberg as chief representatives for their respective regions for terms commencing December 1, 2018 and expiring May 31, 2020. Make a motion to extend term expiration of all remaining members by six months so the term will be completed May 31 instead of November 30.

FIRE COMMISSION

Name	Representing	Initial Appt	Current Appt	Term Expiration
Barbara Allred	Citizen	Nov-14	Nov-16	11/1/2018
Brian Atkins	Citizen	Dec-17	Dec-17	11/30/2019
Mike Cameron (Vice Chair)	Chief - East Region (Cypress Pointe)	Nov-14	Nov-15	11/30/2017
Jarius Garner	Chief - North Region (Robbins)	Dec-17	Dec-17	11/30/2019
Rich Lambdin	President - MCCA	Nov-14	Nov-14	at end of presidency
John McIver	Chief - South Region (Pinebluff)	Nov-14	Nov-16	11/1/2018
Bryan Phillips	Moore County Public Safety Director			N/A
Randy Saunders	Citizen	Dec-17	Dec-17	11/30/2019
Scotty Scott **RESIGNED**	Citizen	Nov-14	Nov-16	11/1/2018
Erik Stromberg	Chief -West Region (West End)	Sep-16	Nov-16	11/1/2018
Brian Tyner	Chief - Central Region (Carthage)	Nov-14	Dec-17	11/30/2019
Larry Upchurch (Chair)	Citizen	Nov-14	Nov-16	11/1/2018
Otis Ritter	Commissioners (liaison - non-voting)	Jan-15	Jan-15	N/A

Agenda Item: XIII.C.
Meeting Date: **12/03/2018**

MEMORANDUM TO THE MOORE COUNTY BOARD OF COMMISSIONERS:

FROM: **Laura M. Williams, Clerk**

DATE: **11/27/2018**

SUBJECT: **Appointments / Juvenile Crime Prevention Council**

REQUEST:

Designate Juvenile Crime Prevention Council (JCPC) member position.

BACKGROUND:

JCPC member Laura May has previously served as a commissioner appointee member. She is now employed with Moore County Schools and is recommended to serve as the Superintendent's designee.

IMPLEMENTATION PLAN:

Clerk will make notification of appointment and update records.

RECOMMENDATION SUMMARY:

Make a motion to change JCPC member Laura May's position designation to the Schools' representative.

Agenda Item: XIII.D.
Meeting Date: **12/03/2018**

MEMORANDUM TO THE MOORE COUNTY BOARD OF COMMISSIONERS:

FROM: **Laura M. Williams, Clerk**

DATE: **11/27/2018**

SUBJECT: **Appointments / Local Emergency Planning Committee**

REQUEST:

Appoint new member to the Local Emergency Planning Committee (LEPC).

BACKGROUND:

LEPC member John Ganley's term expires this month. He has served in the hospital representative position and has recommended Shannon Stroud as his replacement.

IMPLEMENTATION PLAN:

Clerk will make notification of appointment and update records.

RECOMMENDATION SUMMARY:

Make a motion to appoint Shannon Stroud to the Local Emergency Planning Committee as the hospital representative for a three-year term commencing January 1, 2019 and expiring December 31, 2021.

ATTACHMENTS:

Letter from John Ganley

FirstHealth
OF THE CAROLINAS

November 26, 2018

D. Scot Brooks, CEM, CCEMT-P, CCM
Deputy Director of Public Safety

Scot,
Shannon Stroud has been hired as Director of Safety and Emergency Management for FirstHealth of the Carolinas. Could you please request from the Moore County Board that Shannon replace me on the Local Emergency Planning Committee to represent Moore Regional Hospital.

Thank you,
John Ganley
Director Facility Services
Moore Regional Hospital

Agenda Item: XIII.E.
Meeting Date: **12/03/2018**

MEMORANDUM TO THE MOORE COUNTY BOARD OF COMMISSIONERS:

FROM: **Laura M. Williams, Clerk**

DATE: **11/27/2018**

SUBJECT: **Appointments / Nursing and Adult Care Home Community Advisory Committee**

REQUEST:

Appoint two new members and reappoint one member to the Nursing and Adult Care Home Community Advisory Committee.

BACKGROUND:

Nursing/Adult Care CAC applicants Sandi King and Robbie Salisbury have recently completed required training and are now recommended for appointment. Additionally, member Helen Schillaci's term expires this month and she is recommended for reappointment.

IMPLEMENTATION PLAN

Clerk will make notification of appointments and update records.

RECOMMENDATION SUMMARY

Make a motion to appoint Sandi King and Robbie Salisbury to the Nursing and Adult Care Home Community Advisory Committee for initial one-year terms expiring December 31, 2021.

Make a motion to reappoint Helen Schillaci to the Nursing and Adult Care Home Community Advisory Committee for a three-year term expiring December 31, 2021.

ATTACHMENTS:

New Member Appointment Applications

Moore County
Advisory Board/Committee Appointment Application

The Moore County Board of Commissioners encourages you to participate in Moore County government by serving on an advisory board/committee. The purpose of these boards/committees is to assist the County Commissioners in making effective decisions concerning local issues and projects which will improve the quality of life in our community. If you would like to be considered for appointment to a board/committee, please complete this form and forward it, along with any relevant attachments (such as a resume) to the address below, or email it to clerktoboard@moorecountync.gov.

County of Moore
Attention: Laura M. Williams, Clerk
P.O. Box 905
Carthage, NC 28327

More information can be obtained at www.moorecountync.gov/boc or by calling 910-947-6403. Please note that information you submit may be public record.
Please check the following boards/committees on which you are interested in serving. If you are interested in more than one, please numerically rank.

- ☐ ABC Board
- ☐ Aging Advisory Council
- ☐ Airport Authority
- ☐ Animal Cruelty Officer
- ☐ Animal Operations Board
- ☐ Board of Adjustment
- ☐ Citizens' Pet Responsibility
- ☐ Community College Trustees
- ☐ Convention & Visitors Bureau
- ☐ Fire Commission
- ☐ Health Board
- ☐ Human Resources Appeals
- ☐ Jury Commission
- ☐ Juvenile Crime Prevention
- ☐ Library Trustees
- ☐ Local Emergency Planning
- ☑ Nursing/Adult Care Home
- ☐ Planning Board
- ☐ Recreation Advisory Board
- ☐ RSVP Advisory Council
- ☐ Sandhills Center Area Board
- ☐ Social Services Board
- ☐ Subdivision Review Board
- ☐ Tax Equalization/Review
- ☐ Transportation Services
- ☐ Workforce Development

NAME Sandi King

MAILING ADDRESS 34 Plantation Dr, Southern Pines N.C. 28387

HOME PHONE —— **WORK/MOBILE PHONE** 301-461-0275

EMAIL Sandi.King@cisco.com **OCCUPATION** Sr. mktg. mgr.

BACKGROUND QUALIFICATIONS
- marketing background
- Elderly relatives/care

SIGNATURE [signature] **DATE** 10/26/18

Moore County
Advisory Board/Committee Appointment Application

The Moore County Board of Commissioners encourages you to participate in Moore County government by serving on an advisory board/committee. The purpose of these boards/committees is to assist the County Commissioners in making effective decisions concerning local issues and projects which will improve the quality of life in our community. If you would like to be considered for appointment to a board/committee, please complete this form and forward it, along with any relevant attachments (such as a resume) to the address below, or email it to clerktoboard@moorecountync.gov.

County of Moore
Attention: Laura M. Williams, Clerk
P.O. Box 905
Carthage, NC 28327

More information can be obtained at www.moorecountync.gov/boc or by calling 910-947-6403. Please note that information you submit may be public record.
Please check the following boards/committees on which you are interested in serving. If you are interested in more than one, please numerically rank.

- ☐ ABC Board
- ☐ Aging Advisory Council
- ☐ Airport Authority
- ☐ Animal Cruelty Officer
- ☐ Animal Operations Board
- ☐ Board of Adjustment
- ☐ Citizens' Pet Responsibility
- ☐ Community College Trustees
- ☐ Convention & Visitors Bureau
- ☐ Fire Commission
- ☐ Health Board
- ☐ Human Resources Appeals
- ☐ Jury Commission
- ☐ Juvenile Crime Prevention
- ☐ Library Trustees
- ☐ Local Emergency Planning
- XX Nursing/Adult Care Home
- ☐ Planning Board
- ☐ Recreation Advisory Board
- ☐ RSVP Advisory Council
- ☐ Sandhills Center Area Board
- ☐ Social Services Board
- ☐ Subdivision Review Board
- ☐ Tax Equalization/Review
- ☐ Transportation Services
- ☐ Workforce Development

NAME ROBBIE SALISBURY (ROBERTA M. SALISBURY)
MAILING ADDRESS 116 PINE RIDGE DRIVE WHISPERING PINES, NC 28327
HOME PHONE 910-949-3533 **~~WORK~~/MOBILE PHONE** 910-528-0810
EMAIL 116robbie@gmail.com **OCCUPATION** retired office manager
BACKGROUND QUALIFICATIONS see attached resume.

SIGNATURE Robbie Salisbury **DATE** October 16, 2018

Agenda Item: XIII.F.
Meeting Date: 12/03/2018

MEMORANDUM TO THE MOORE COUNTY BOARD OF COMMISSIONERS:

FROM: **Laura M. Williams, Clerk**

DATE: **11/27/2018**

SUBJECT: **Appointments / Transportation Advisory Board**

REQUEST:

Appoint new member to the Transportation Advisory Board and change one member's position designation.

BACKGROUND:

Ms. Gracie Dowdy has previously served as the Moore County Schools representative on the Transportation Advisory Board. Ms. Dowdy has recently retired and Mr. Kevin Griffin, Transportation Director for Moore County Schools, has been recommended for appointment to that position. Additionally, Ms. Dowdy has expressed her desire to continue as a citizen/transit representative.

IMPLEMENTATION PLAN

Clerk will make notification of appointments and update records.

RECOMMENDATION SUMMARY

Make a motion to appoint Kevin Griffin to the Moore County Schools representative position on the Transportation Advisory Board for a three-year term expiring December 31, 2021, and change TAB member Gracie Dowdy's position designation to citizen/transit representative.